Journal of Technology Innovations and Energy

ISSN: 2957-8809

Vol. 2 No. 4 (2023)

Global Scientific Research

www.jescae.com

Journal of Technology Innovations and Energy

Vol.2, No.4

December, 2023

Chief Editor	Dr. Hayat Khan
Edited by	Global Scientific Research
Published by	Global Scientific Research
Email	thejtie@gmail.com
Website	www.jescae.com
Journal Link:	https://www.jescae.com/index.php/JTIE
Doi:	https://doi.org/10.56556/jtie.v2i4

CONTENTS

S.NO	TITLE	AUTHORS	PAGES
1	A comprehensive review of artificial intelligence and machine learning applications in energy consumption and production	Asif Raihan	1-26
2	Digital Divide and Uptake of Public E-Service in Nigeria: A Narrative Review	Chima Paul, Ekhator V.E Victor	27-41
3	Investigation of Gas Turbine Blade Materials for Efficient Energy System	Irfan Ullah, Najma Bashir	42-55
4	Investigation of the Thermophysical Properties of Nanofluids Based on Metal Oxides: Application in Concentrated Solar Power Plants	Fatah Boufoudi, Salah Zouaoui, Sofiane Mihoub	56-66
5	Sustainable Financial Technology through Regulation Technology: The Asian Experience	Shahid Hussain, Saad ur Rehman	67-79

Journal of Technology Innovations and Energy
https://doi.org/10.56556/jtie.v2i4.608
ISSN: 2957-8809

REVIEW ARTICLE

A comprehensive review of artificial intelligence and machine learning applications in the energy sector

Asif Raihan

Institute of Climate Change, Universiti Kebangsaan Malaysia, Bangi 43600, Selangor, Malaysia

Corresponding author: Asif Raihan: asifraihan666@gmail.com, ORCID ID: 0000-0001-9757-9730
Received: 19 August, 2023, Accepted: 16 October, 2023, Published: 19 October, 2023

Abstract
The energy industry worldwide is today confronted with several challenges, including heightened levels of consumption and inefficiency, volatile patterns in demand and supply, and a dearth of crucial data necessary for effective management. Developing countries face significant challenges due to the widespread occurrence of unauthorized connections to the electricity grid, resulting in substantial amounts of unmeasured and unpaid energy consumption. Nevertheless, the implementation of artificial intelligence (AI) and machine learning (ML) technologies has the potential to improve energy management, efficiency, and sustainability. Therefore, this study aims to evaluate the potential influence of AI and ML technologies on the progress of the energy industry. The present study employed the systematic literature review methodology to examine the challenges arising from frequent power outages and limited energy accessibility in various developing nations. The results of this study indicate that AI and ML possess significant potential in various domains, including predictive maintenance of turbines, optimization of energy consumption, management of power grids, prediction of energy prices, and assessment of energy demand and efficiency in residential buildings. This study concluded with a discussion of the necessary measures to enable developing nations to harness the advantages of AI and ML in the energy sector.

Keywords: Artificial intelligence; Machine learning; Deep learning; Energy; Technology

Introduction

To effectively address the obstacles connected with the integration of complicated AI technologies into smart energy systems and grids, it is important to possess a comprehensive comprehension of computational, economic, and social factors (Danish, 2023). In addition to the post-industrial society and its consequences, the pursuit of pragmatic solutions for global progress has garnered the participation of business, academia, and society in the endeavor to attain sustainable development (Raihan et al., 2018; Begum et al., 2020; Raihan et al., 2021a; Ali et al., 2022; Raihan et al., 2022a; Kurup et al., 2023; Raihan, 2023a). The pursuit of real answers to the global development problem involves the active participation of business, academia, and society (Raihan et al., 2019; Jaafar et al., 2020; Raihan et al., 2021b; Voumik et al., 2022; Raihan & Himu, 2023; Raihan, 2023b; Sultana et al., 2023a; Raihan, 2023c). The global energy segment is confronted with various issues, such as increasing energy use and concerns regarding efficiency, volatile patterns in supply and demand, and a lack of

adequate analytics for effective management (Raihan et al., 2022b; Benedek et al., 2023; Raihan et al., 2022c; Ghosh et al., 2023; Raihan et al., 2022d; Sultana et al., 2023b; Raihan, 2023d). The severity of these difficulties is amplified in nations characterized by expanding marketplaces, often denoted as emerging markets (Raihan et al., 2022e; Isfat & Raihan, 2022; Voumik et al., 2023a; Raihan et al., 2022f). Numerous instances of unauthorized "connections to the power grid" exist, indicating a substantial quantity of energy that remains unmeasured or unpaid. The aforementioned outcomes lead to financial losses and heightened levels of carbon dioxide emissions, hence emphasizing the significance of addressing efficiency challenges (Rao & Rao, 2019; Raihan & Said, 2022; Raihan et al., 2022g; Voumik et al., 2023b; Raihan, 2023e),

Consumers exhibit less motivation to utilize energy responsibly when it is supplied to them without any associated costs (Raihan et al., 2022h; Shi et al., 2023; Raihan, 2023f). The power business in numerous developed nations has commenced the deployment of AI and other associated technologies facilitating communication among smart grids, smart meters, and Internet of Things (IoT) devices (Raihan et al., 2023a). These advancements possess the capacity to enhance the adoption of renewable energy resources, as well as enhance power management, efficiency, and transparency (Makala & Bakovic, 2020; Raihan et al., 2022i). Ghoddusi et al. (2019) asserted that the implementation of ML is generating new prospects for innovative research in the fields of energy economics and finance. Ghoddusi et al. (2019) carried out an in-depth study of the expanding body of research on the uses of ML in the fields of energy economics and finance. It has been discovered that ML possesses a diverse array of possible applications. Ghoddusi et al. (2019) conducted an analysis that revealed diverse applications across various sectors. These applications encompassed the evaluation of macro and energy trends, the prediction of demand, the mitigation of risk, the formulation of trading strategies, and the manipulation of data. Crude oil, natural gas, and power are three forms of energy whose prices serve as illustrative instances that can be projected. Furthermore, Chen et al. (2020) put forth the notion that the utilization of ML is swiftly transforming the domains of physics and chemistry, along with several other disciplines.

According to Chen et al. (2020), AI and ML have the potential to facilitate the establishment of material connections, enhance the understanding of material chemistry, and expedite the process of material creation. ML is presently being investigated as a novel approach to use its capacity for autonomously performing intricate tasks. AI is also being utilized in the facilitation of material linkages. The study conducted by Chen et al. (2020) demonstrated the potential application of ML techniques in diverse energy materials. The materials encompassed in this category are rechargeable alkali-ion batteries, catalysts, photovoltaics, piezoelectrics, thermoelectrics, and superconductors. According to Liu et al. (2021), the utilization of data-driven approaches in materials research has the potential to revolutionize scientific advancements and introduce novel paradigms in the realm of energy materials. This transformative potential is attributed to the advancements in AI and ML techniques. These advancements are anticipated to transpire as a result of recent enhancements in technology. As a result of this development, there exists a heightened potential for data-driven materials science to exert a substantial influence on research outcomes. Liu et al. (2021) argue that the application of ML technology in data-driven materials engineering has the potential to streamline the process of designing and developing advanced energy materials. Additionally, ML can enhance the efficiency of discovering and implementing these materials.

The residential and commercial sectors are estimated to contribute around 40 percent of the overall world energy consumption (Nabavi et al., 2020; Raihan & Tuspekova, 2022a; Raihan, 2023g). Nabavi et al. (2020) conducted a study that employed three separate ML algorithms to forecast the future energy demands in both residential and commercial sectors in Iran. Several methods, including multiple linear regression, logarithmic multiple linear regression, and nonlinear autoregressive with exogenous input artificial neural networks, were utilized in these approaches. The study effectively anticipated the energy demands of Iran. Accordingly, Nabavi et al. (2020) posited that the anticipation of energy demand in the residential and commercial sectors would enable

governments to effectively provide energy sources and formulate sustainable energy strategies. Several examples of these designs involve harnessing both renewable and non-renewable energy resources to establish a secure and ecologically sustainable energy infrastructure. According to Nabavi et al. (2020), an argument is put up on the significance of modeling energy consumption in residential and commercial sectors as a means to identify the essential economic, social, and technological factors that contribute to achieving a reliable energy supply. The basis of this argument is the discovery that by identifying the significant economic, social, and technological factors, it becomes possible to create a model for predicting energy use in both residential and commercial sectors. The subject matter was addressed within the framework employed to simulate the energy consumption of residential and commercial buildings. Furthermore, Xu et al. (2019) argued that precise forecasts of corporate bankruptcy within the Chinese energy industry have a dual role in stimulating ongoing enhancements in state power generation and promoting sustainable investments in the energy sector. The findings were deliberated with stakeholders from the Chinese energy industry. Moreover, Xu et al. (2019) introduced a new integrated model (NIM) for predicting business failure in the Chinese energy industry, which incorporates both textual and numerical data. Based on the findings of Xu et al. (2019), it can be inferred that the utilization of AI and ML holds significant potential in the energy segment, specifically in emerging economies, for energy production and consumption.

Energy has a pivotal role in global economic and social growth (Raihan & Tuspekova, 2022b; Raihan et al., 2023b). In recent decades, there has been a substantial increase in global energy demand, exhibiting exponential growth (Raihan & Tuspekova, 2022c; Raihan et al., 2023c). As a result, many governments have expressed significant concern regarding the precise forecasting of energy consumption (Raihan & Tuspekova, 2022d; Raihan et al., 2023d). Nevertheless, the implementation of AI and other related technologies has the potential to improve power management, efficiency, and transparency (Ahmad et al., 2022). Furthermore, the utilization of ML is creating novel opportunities for pioneering research in the domains of energy economics and finance (Danish, 2023). However, there is a research gap in the existing literature evaluating the implications of AI and ML in the energy segment. Therefore, the aforementioned factors motivated this study to fill up the research gap by examining the challenges stemming from the prevalent absence of electricity and the persistent incidence of load-shedding. The objective of this study is to assess the potential impacts of AI and ML on the energy industry, with a specific focus on their role in improving energy generation in developing areas. The current investigation examined the growing body of literature concerning the application of ML techniques in the fields of energy economics and finance. This review additionally presents an original contribution by examining the potential consequences for future research in the domain of smart cities and identifying potential areas for further investigation. This study makes a valuable contribution to the current body of research by examining the potential implications, challenges, as well as future prospects of AI and ML in the context of smart energy and sustainability. The novelty of this research is the emergence of unique opportunities for harnessing the potential advantages of AI and ML in the energy sector of emerging nations. The results of this study serve as a valuable basis for future research endeavors that aim to explore the potential impact of AI and ML on the energy sector, with a specific focus on improving energy efficiency in developing countries.

The subsequent sections of this article are structured in the following manner: the initial section introduces the theoretical and empirical viewpoints of AI, ML, and deep learning (DL). Subsequently, the study delved into the technique employed and explored the potential contributions of AI and ML in the energy sector of developing nations. The “Literature Review” section is followed by the “Methodology” section where the methods of conducting this study are described. The “Results and Discussion” section demonstrates various implications of AI and ML technologies in energy production as well as provides recommendations for emerging energy markets

to maximize the integration of AI and ML technologies. Finally, the “Conclusion” section summarizes the study findings with concluding remarks, challenges, limitations, and future research directions.

Theoretical and Empirical Perceptions of AI, ML, and DL

The historical narrative of AI extends beyond the mere replication or substitution of human cognitive abilities by computers. It encompasses the evolution of our understanding and perception of intelligence over time (Bharadiya, 2023). Consequently, it can be argued that AI should not be considered a mere invention, contrary to the prevailing narrative. Instead, it is deeply rooted in broader historical contexts that encompass the fundamental components of intelligence and AI. According to McCarthy (2007), AI can be described as the field of study and application that encompasses the scientific and engineering principles involved in developing intelligent devices, with a specific focus on intelligent computer programs. AI is associated with the same domain of utilizing computer systems to comprehend human intelligence. Nevertheless, AI is not restricted to solely employing physiologically observable methodologies. Conversely, it pertains to the endeavor of employing computational systems to grasp the intricacies of human intelligence (Sutton, 2020). Alternatively, intelligence can be defined as the ability to acquire and employ efficient problem-solving techniques and achieve desired objectives, taking into account the unique circumstances of a dynamic and unpredictable world. According to Hua et al. (2023), a manufacturing robot that is fully pre-programmed exhibits versatility, accuracy, and reliability, although it is devoid of any form of intelligence.

The inception of discourse on AI was established by Alan Turing's seminal work, "Computing Machinery and Intelligence," published in 1950. This occurred several decades before the emergence of this notion. In this particular written work, Turing, widely recognized as the pioneer of computer science, raises the inquiry of whether machines possess the capability to engage in cognitive thought. Subsequently, he put out a proposed examination that would subsequently gain widespread recognition as the Turing Exam. In the conducted experiment, an individual acting as an interrogator would endeavor to discern between a written response generated by a machine and one produced by a human (IBM, 2023). The question test has undergone extensive examination since its initial publication, rendering it a significant component of both the AI field's historical narrative and an enduring topic within the realm of philosophy. This is due to its utilization of language concepts. Subsequently, Stuart Russell and Peter Norvig proceeded to author a seminal publication titled "Artificial Intelligence: A Modern Approach," which has since garnered significant recognition as a very influential textbook within the realm of AI research. The article discusses four distinct objectives or conceptualizations of AI, which categorize computer systems according to their capacity for logical reasoning and cognitive processes as opposed to practical applications. In alternative terms, a comparison is made between the two. Figure 1 illustrates the diverse conceptions of AI. Alan Turing's notion of AI would have encompassed systems that exhibit behavior similar to that of humans. AI can be described as an interdisciplinary field that integrates computer science with large datasets to facilitate problem-solving. Furthermore, it encompasses the subfields of ML and DL, which are frequently cited within the realm of AI. These domains consist of AI algorithms that aim to develop advanced systems capable of making predictions or classifications based on the available data (IBM, 2023).

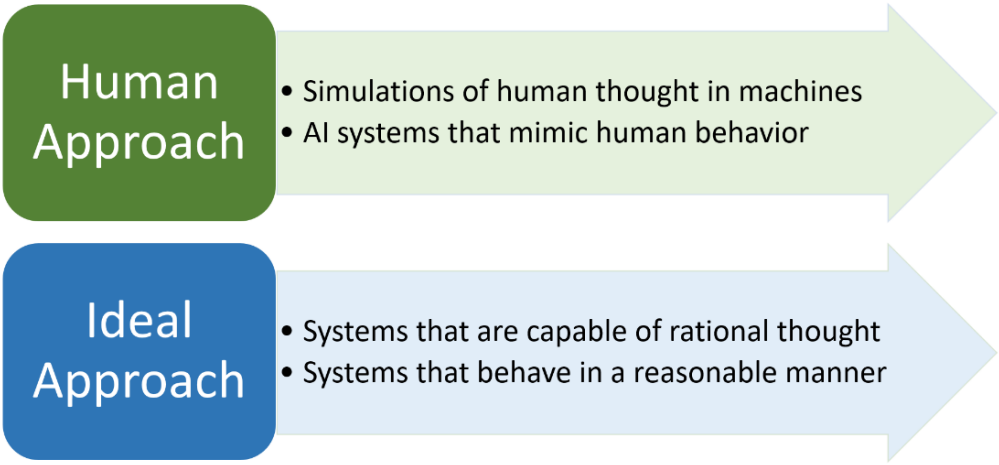

Figure 1. Definition of AI.

The terms "deep learning" and "machine learning" are occasionally employed interchangeably; nonetheless, it is crucial to establish clear boundaries between the two. DL is a specialized domain within the broader science of ML, which itself falls under the umbrella of AI. Both ML and DL are considered sub-disciplines within the broader topic of AI. Figure 2 illustrates the interrelationships of AI, ML, and DL. Neural networks serve as the foundational components of DL methodologies. According to IBM (2023), a DL algorithm can be characterized by the inclusion of more than three layers in a neural network, encompassing both the input and output layers. The term "deep" in the context of "deep learning" pertains to the significant number of layers included in the neural network architecture (LeCun et al., 2015).

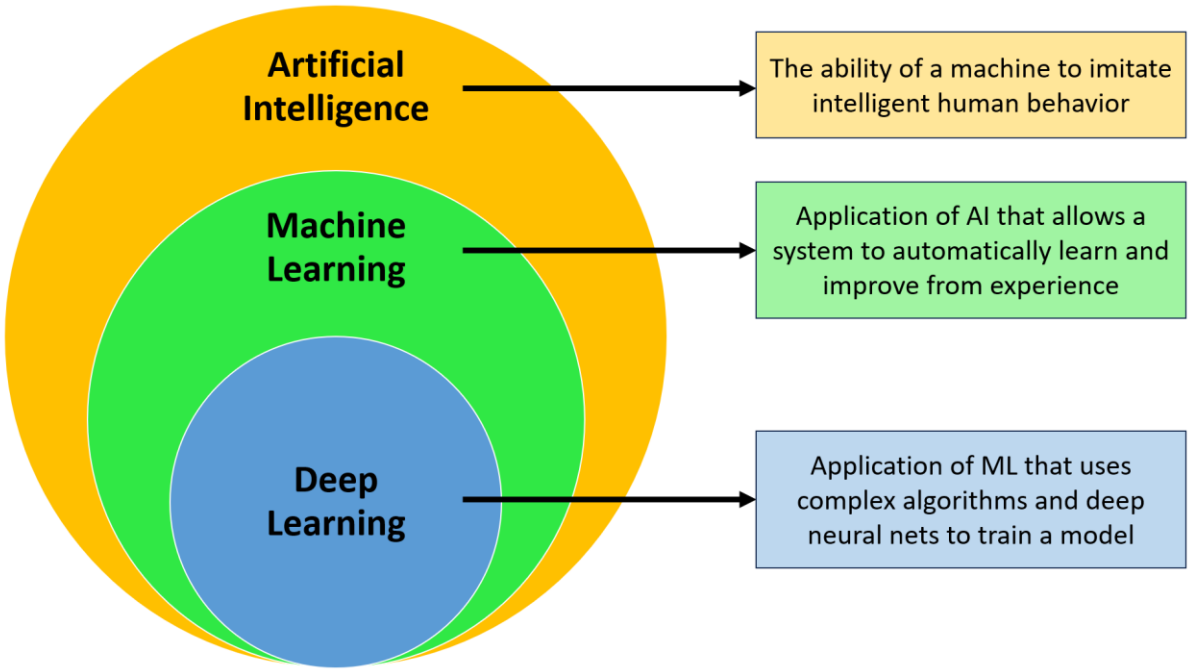

Figure 2. The connections between AI, ML, and DL.

Figure 3 provides a visual representation of the knowledge acquisition process employed by individual algorithms, specifically DL and ML, for comparative purposes. DL can automate a substantial proportion of the feature extraction stage in the process. Consequently, a reduction in the necessary manual human involvement can be achieved, thereby enabling the utilization of larger data sets (Budd et al., 2021). Contrary to ML, DL can operate without the necessity of a labeled dataset, as highlighted by Attri et al. (2023). Supervised learning, also referred to as ML, is a term used to describe a specific category of algorithms within the field of AI. The system possesses the capacity to process unstructured data in its original state, encompassing both textual and visual content. Additionally, it is capable of autonomously discerning the hierarchical structure of qualities that distinguish distinct data kinds. Unlike ML, human interaction is not necessary for the processing of data. Consequently, the potential for further advancements in ML can be extended in a more stimulating manner (Sun & Scanlon, 2019).

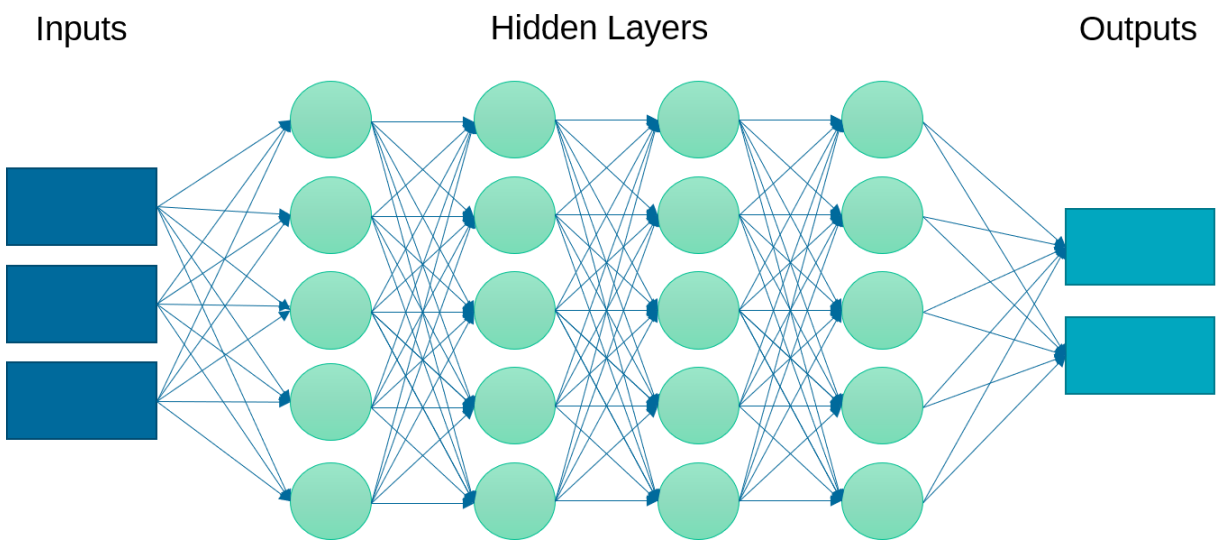

Figure 3. Deep learning neural network.

The sub-discipline of AI, sometimes referred to as ML, is concerned with the development and application of algorithms designed to facilitate data-driven prediction, classification, and optimization systems. The study of ML encompasses three primary subfields, namely supervised learning, unsupervised learning, and reinforcement learning. In the domain of ML, the term "supervised learning" pertains to the procedure of constructing algorithms that enable prediction or classification tasks by utilizing data that has been appropriately labeled. According to Talukdar et al. (2023), these algorithms must have inputs (predictors) that are associated with an output (reaction). When the output variable is characterized by distinct categories, the task at hand is classification. Conversely, when the output variable is characterized by a continuous range of values, the task at hand is prediction. Supervised learning encompasses a range of methods, including linear and nonlinear regression, neural networks, random forests, and decision trees, as demonstrated by Kumar et al. (2023). Unsupervised learning encompasses the identification and analysis of patterns and trends within unlabeled data. The objective of this scenario is not to predict a certain outcome, but rather to detect shared characteristics within the data through the utilization of clustering algorithms and comparable methodologies (Cunha et al., 2023). One of the techniques that fall under consideration is the principle components analysis. Reinforcement learning involves the development and deployment of learning agents within an environment, to maximize their potential rewards (Coraci et al., 2023). There exists a necessity for the implementation of comprehensive energy resource

planning at both the national level and within emerging economies (Raihan & Voumik, 2022a; Raihan & Tuspekova, 2022e; Raihan, 2023h). The utilization of ML techniques in energy systems, encompassing both energy generation and consumption, exhibits significant potential. Ahmad et al. (2022) argued that the application of ML algorithms can enhance the optimization of energy generation systems, explicitly those of wind and hydro sources.

The application of predictive maintenance systems, which employ condition monitoring techniques typically facilitated by ML and the IoT, can be extended to the maintenance of energy production systems such as stations, machinery, and power lines. In the context of consumption, energy efficiency emerges as the paramount determinant (Raihan & Voumik, 2022b; Raihan & Tuspekova, 2022f; Raihan, 2023i). ML has proven to be highly effective in optimizing consumption through the utilization of supervised learning algorithms, including neural networks and similar techniques (Wang et al., 2023). An apt demonstration of this concept can be observed in the context of a cooling system. For example, it is necessary to possess knowledge about the operational context, the functions it fulfills, the leadership dynamics, the activities conducted within its premises, and the prevailing seasonal conditions, such as winter or summer. In the given situation, ML demonstrates outstanding performance. Routine modifications to the gadget are unnecessary for an engineer, as it possesses the capability to accommodate a diverse array of input values and acquire knowledge from the data it is provided. Optimizing the usage of individual air conditioning units has the potential to yield a significant impact, given the huge volume of air conditioners supplied and installed annually, which reaches millions.

The heating, ventilation, and air conditioning (HVAC) systems within a building are tasked with the responsibility of regulating and sustaining optimal temperature and humidity levels (Raut et al., 2023). Woods et al. (2022) asserted that HVAC systems contribute to over 50% of the overall energy usage within a building and consume approximately 10% of the global electrical supply. The optimization of HVAC systems is a significant potential for us to effectively achieve our sustainability objectives by reducing energy consumption and mitigating carbon dioxide emissions (Ahmad et al., 2022; Raihan & Tuspekova, 2023a; Raihan, 2023j). ML and AI have been extensively utilized in the domain of fossil fuel energy source exploration and drilling (Okoroafor et al., 2022). An example of collaboration between academic and industrial entities is the partnership between the Massachusetts Institute of Technology (MIT) and Exxon Mobil. This collaboration aims to build autonomous underwater robots with ML capabilities. The primary objective of these robots is to explore the ocean surface and identify suitable locations for oil and natural gas drilling operations. These autonomous robotic systems possess the capability to collect and analyze data on the oceanic bed. By integrating ML techniques, specifically reinforcement learning, these robots can acquire knowledge from their mistakes during the process of underwater exploration. However, the utilization of AI and ML systems and algorithms for grid management holds significant potential as a vital field of application in developing nations that employ smart grids. According to Ghiasi et al. (2023), smart grids facilitate bidirectional communication between electric energy producers and consumers. Smart grids refer to power grids that integrate ML, AI, and the IoT by utilizing sensors, meters, and other alerting devices to gather and provide data to users (Slama, 2022). This feature allows individuals to observe and enhance their energy usage. Smart grids, alternatively referred to as intelligent grids, are a recognized term in the field. In the realm of manufacturing, smart grids offer producers the ability to effectively monitor energy use and mitigate the occurrence of unauthorized power connections. These issues are particularly prevalent in emerging nations, as highlighted by Kataray et al. (2023). Smart grids have the potential to facilitate the monitoring of energy use by producers and reduce the occurrence of unauthorized power connections.

Empirical Literature Review

The utilization of data systems is of paramount importance in the attainment of climate targets within the energy industry (Das et al., 2023; Raihan & Tuspekova, 2023b). The proliferation of digital technology in the energy industry and the abundance of data have led to the emergence of data-driven ML strategies as viable approaches (Strielkowski et al., 2023). To now, scholars have primarily directed their attention toward enhancing the predicted accuracy of ML algorithms (Lee et al., 2023). According to Ghoddusi et al. (2019), the field of ML is facilitating novel avenues for research in the domains of energy economics and finance. In their study, Ghoddusi et al. (2019) presented many illustrations of practical implementations, encompassing the projection of energy prices for commodities such as crude oil, natural gas, and power. Additionally, the authors discussed the application of these projections in anticipating demand, managing risk, constructing trading strategies, processing data, and assessing macro and energy trends. According to the findings of Ghoddusi et al. (2019), Support Vector Machines (SVM), Artificial Neural Networks (ANN), and Genetic Algorithms (GAs) are among the predominant methodologies employed in the investigation of energy economics. The study concluded by emphasizing specific areas of limited understanding and providing recommendations for further investigation.

To establish a correlation between dimensionless characteristics and power-law-like associations, Lin et al. (2022) proposed the utilization of a novel neural network framework known as DimNet. The study conducted by Lin et al. (2022) demonstrated the potential of transforming DimNet into an explicit algebraic piecewise power-law-like function. This transformation enhances the interpretability of DimNet, distinguishing it from traditional neural networks that are commonly regarded as opaque or "black boxes". The ease of modification of DimNet played a crucial role in enabling this finding. Lin et al. (2022) have devised a data-driven, empirical model employing DimNet to approximate the pre-dry out heat transfer coefficient in flow boiling within micro fin tubes. The main objective of this model is to forecast the flow boiling heat transfer coefficient before the onset of drying. The model created by DimNet underwent fine-tuning through the comparison of multiple sets of prominent dimensionless properties. Additionally, the network design was modified after training on a comprehensive database consisting of 7349 experimental data points for 16 distinct refrigerants. The model proposed by Lin et al. (2022) is both statistically robust and incorporates trends in the heat transfer coefficient that are determined by a specific set of factors.

The high level of accuracy in predicting outcomes attained by the model can be attributed to DimNet's capacity to autonomously categorize the data into optimal regions while concurrently establishing correlations among the variables within each region. According to the findings of Lin et al. (2022), the DimNet design demonstrates a high level of suitability for effectively modeling heat transfer and flow problems that involve many physical domains. In the context of convective heat transfer, the search for a power-law-like input-output relationship is particularly relevant. Zhou et al. (2021) also asserted the significance of short-term forecasting models in predicting photovoltaic (PV) energy generation. The utilization of these models is imperative in the context of AI-driven IoT modeling for smart cities, as they play a crucial role in ensuring the stability of power integration between PV systems and the smart grid. According to Zhou et al. (2021), recent developments in AI and IoT technology have facilitated the application of DL techniques to enhance the accuracy of energy generation forecasts for PV systems. This proposition is viable as the conventional approach for predicting PV energy production encounters challenges in including external factors, such as seasonality, in its calculations.

Zhou et al. (2021) proposed a hybrid DL strategy for forecasting PV energy generation by incorporating clustering algorithms, a convolutional neural network (CNN), a long short-term memory (LSTM), and an attention mechanism into a wireless sensor network. The aforementioned plan was formulated to augment previous endeavors aimed at resolving the matter. Zhou et al. (2021) propose a system that is founded upon three

independent procedures: clustering, training, and forecasting. The study conducted by Zhou et al. (2021) involved a comparison of experimental outcomes with those achieved through conventional systems, including traditional artificial neural networks, long short-term memory neural networks, and an algorithm that combines long short-term memory neural networks with an attention mechanism. The results indicated notably improved prediction accuracy rates across all time intervals. According to Arumugam et al. (2022), ML encompasses a diverse range of methodologies aimed at developing a predictive model only based on past data, with the ability to forecast future data. Zhou et al. (2021) elucidate that the development of a prediction model through ML entails the assessment of data samples to discern patterns and the establishment of decision rules. In addition, Zhou et al. (2021) posited that the predictive capabilities of ML algorithms have the potential to facilitate intelligent agricultural practices and enhance wind speed forecasting, both of which play a pivotal role in augmenting energy generation.

According to Zhou et al. (2021), a critical concern in the field of electrical engineering research is the enhancement of accuracy in forecasting power demand and pricing. Zhou et al. (2021) argued that the utilization of ML algorithms is highly advantageous in tackling the complex issues encountered in the field of energy and power engineering, owing to their remarkable predictive capabilities. Energy has a significant role in the economic and social development of a nation (Raihan & Tuspekova, 2022g; Raihan, 2023k). The demand for energy on a global scale has seen exponential growth in recent decades (Raihan & Tuspekova, 2022h; Raihan, 2023l). The issue of energy demand forecasting has been a significant focus in an increasing number of countries (Raihan & Tuspekova, 2022i; Raihan, 2023m). If governments possess the ability to anticipate the energy requirements in the residential and commercial sectors, they will be more effectively equipped to provide energy resources and formulate strategies for the establishment of sustainable energy production (Raihan & Tuspekova, 2022j; Raihan et al., 2022j; Raihan, 2023n). The implementation of these techniques may entail harnessing both renewable and nonrenewable energy sources to establish a dependable and environmentally sustainable power network (Raihan & Tuspekova, 2022k; Raihan, 2023o).

Nabavi et al. (2020) posited that the modeling of energy use in both residential and commercial sectors facilitates the recognition of significant economic, social, and technological factors, hence leading to the attainment of a reliable energy supply. The assertion made in the statement is supported by the research conducted by Raihan et al. (2023e), which demonstrates that the utilization of industrial energy may be effectively analyzed by considering the impact of economic, social, and technological factors. In their study, Nabavi et al. (2020) employed three distinct ML methodologies to forecast energy consumption patterns in both residential and commercial settings in Iran. Various methodologies, including nonlinear autoregressive with exogenous input artificial neural networks and logarithmic multiple linear regression, were employed in the study. Nabavi et al. (2020) have conducted research indicating that there would be a notable rise in both home and business energy usage within Iran over the forthcoming years. When constructing these models, various criteria are considered, including the proportion of renewable energy in total energy consumption, gross domestic product (GDP), population size, natural gas pricing, and electricity rates.

Serban and Lytras (2020) assert that the Smart Energy domain poses significant research challenges for the future of smart cities. This is primarily due to the criticality of optimization concerns, the necessity of smart and customizable networks, and the utilization of advanced analytical methods and techniques facilitated by AI and ML. According to Raihan et al. (2022f), the utilization of renewable energy is of paramount importance for the sustained expansion of the global economy, particularly in light of the challenges posed by climate change and the depletion of natural resources. To adapt to these changes in demand, the field of AI necessitates the development of novel protocols for the coordination and oversight of various tasks (Serban and Lytras, 2020). To effectively address the various challenges that may impact the growth and resilience of the energy sector, it

is imperative to improve the architecture of the energy infrastructure, as well as the deployment and production of renewable energy. In their study, Serban and Lytras (2020) proposed a technique for assessing the influence of AI on the real estate market in Europe.

Raihan (2023p) asserted that energy efficiency within the public sector holds significant importance within the framework of smart cities, given that buildings, particularly public ones such as educational, healthcare, governmental, and other public institutions with high usage rates, constitute the primary energy consumers. Furthermore, Zekić-Sušac et al. (2021) stated that there has been inadequate exploration of the new advancements in ML within the realm of big data. The objective of this essay was to address the question of integrating a Big Data platform with ML techniques to develop an intelligent system for effectively managing energy efficiency in the public sector. The concept of the smart city primarily depends on the aforementioned interoperability. Zekić-Sušac et al. (2021) employed deep neural networks, Rpart regression trees, and Random Forests, along with variable reduction approaches, to develop prediction models for the energy consumption of public sector buildings in Croatia. The study conducted by Zekić-Sušac et al. (2021) revealed that the Random Forest technique had the highest level of precision in generating the model. Additionally, a comparative analysis was conducted to assess the key predictors derived from the three distinct methodologies. The suggested MERIDA intelligent system has the potential to integrate models.

To enhance the management of energy efficiency in government buildings within a Big Data framework, this system integrates the collection of extensive data sets with predictive models that analyze energy consumption patterns for individual energy sources. The utilization of big data and the implementation of the MERIDA framework have been suggested as strategies to enhance energy efficiency within the public sector. The use of AI methodologies is progressively becoming integrated within the public and governmental domains (Wirtz et al., 2022). Power and energy enterprises exemplify such industries due to their important significance in sustaining daily existence. Nevertheless, the inclusion of reliability, accountability, and explainability as criteria poses challenges in the direct implementation of AI-based technologies in power systems (Kaur et al., 2022). This is because the economic burdens associated with catastrophic breakdowns and widespread blackouts have the potential to amount to billions of dollars. The development, implementation, and assessment of AI systems play a vital role in the energy industry. To accomplish this objective, it is necessary to employ principles from the field of physics in the analysis of power system measurements. Additionally, the development of AI algorithms is crucial for accurately predicting demand. Moreover, it is vital to construct responsible AI protocols and reliable metrics for assessing the effectiveness of the AI model. These steps are crucial for the betterment of society.

Methodology

The objective of this study is to assess the potential impact of AI and ML on the energy industry, with a specific focus on improving energy generation in developing regions. This study attempts to examine the issues that have emerged as a result of the prevalent absence of electricity and the persistent incidence of load-shedding. The present study employed the systematic literature review methodology as suggested by Raihan and Bijoy (2023). According to Benita (2021), the systematic literature review framework is considered to be a dependable approach. A preliminary review of the literature was conducted to identify pertinent articles, validate the proposed idea, avoid redundancy with previously covered issues, and ensure the availability of sufficient articles for conducting a comprehensive analysis of the significance of AI and ML in the energy sector. According to Tawfik et al. (2019), it is crucial to enhance the retrieval of results by acquiring a comprehensive understanding and familiarity with the study topic through the examination of pertinent materials and active engagement in

relevant debates. This objective can be achieved by conducting a thorough examination of pertinent literature and actively participating in pertinent academic conversations.

The present study examined various strategies aimed at mitigating the influence of prejudice. One of the methods employed was performing a systematic manual search to identify any reports that might have been missed during the original search process. This investigation, employing the methodology proposed by Vassar et al. (2016), discovered no discernible indications of bias. In the context of this investigation, a comprehensive set of five unique methodologies were employed to carry out manual searches. The methods employed encompassed many strategies, such as conducting an exhaustive literature search to identify relevant references from the studies and reviews under consideration. Additionally, efforts were made to establish direct communication with authors and industry experts. Furthermore, supplementary materials, including related papers and articles cited within reputable academic databases such as Google Scholar, Scopus, and Web of Science, were thoroughly examined. The manual search results were initially enhanced and polished through the process of examining the reference lists of the included publications. The initial stage of the process was undertaken. Subsequently, the author engaged in the practice of citation tracking, a method involving the systematic monitoring of all the scholarly works that reference each of the papers incorporated in the collection. In conjunction with the manual search, an online search of databases was also undertaken as an integral component of the comprehensive search process.

This study exclusively relied on research articles that have undergone rigorous evaluation by experts in the field, ensuring the reliability and validity of the findings. Both qualitative and quantitative secondary literature on the application of ML in the fields of energy economics and finance were considered. The publications were thereafter evaluated to ascertain whether their main subject matter bore a resemblance to that of the present inquiry. Priority consideration was given to papers published after the year 2000. The primary justifications for the elimination of papers are their lack of relevance, duplication, incomplete textual content, or limited presence of abstracts. The predetermined exclusion criteria were established to safeguard the researcher against potential biases that could influence their findings. Figure 4 illustrates the progression of review criteria employed for the selection of appropriate documents for analysis.

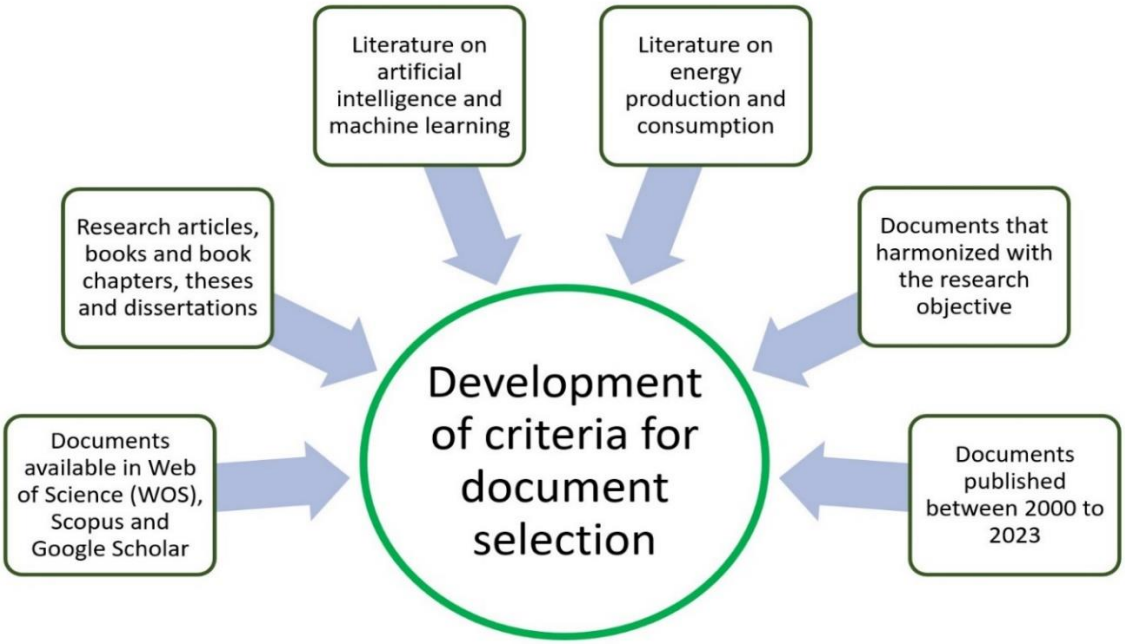

Figure 4. The development of criteria for the selection of documents.

The comprehensive literature review encompassed a total of 130 distinct scholarly articles. The present study implemented a data verification process, wherein each included article was cross-checked with its corresponding entry in an extract sheet using visual evidence in the form of photographs. This was done to identify any discrepancies or errors in the data, as suggested by Tawfik et al. (2019). These errors may arise due to the expected presence of human error and bias. It is noteworthy that of the 130 papers subjected to qualitative synthesis, only those publications containing relevant material were cited in the reference list contained in the manuscript. This implies that certain articles were not included in the reference list. Figure 5 illustrates the systematic review methodologies utilized in the current study. After the research topic was chosen, this study proceeded to find and locate relevant articles, do an analysis and synthesis of diverse literature sources, and create written materials for article review. The synthesis phase encompassed the collection of a wide range of publications, which were subsequently amalgamated into conceptual or empirical analyses that were relevant to the finalized research.

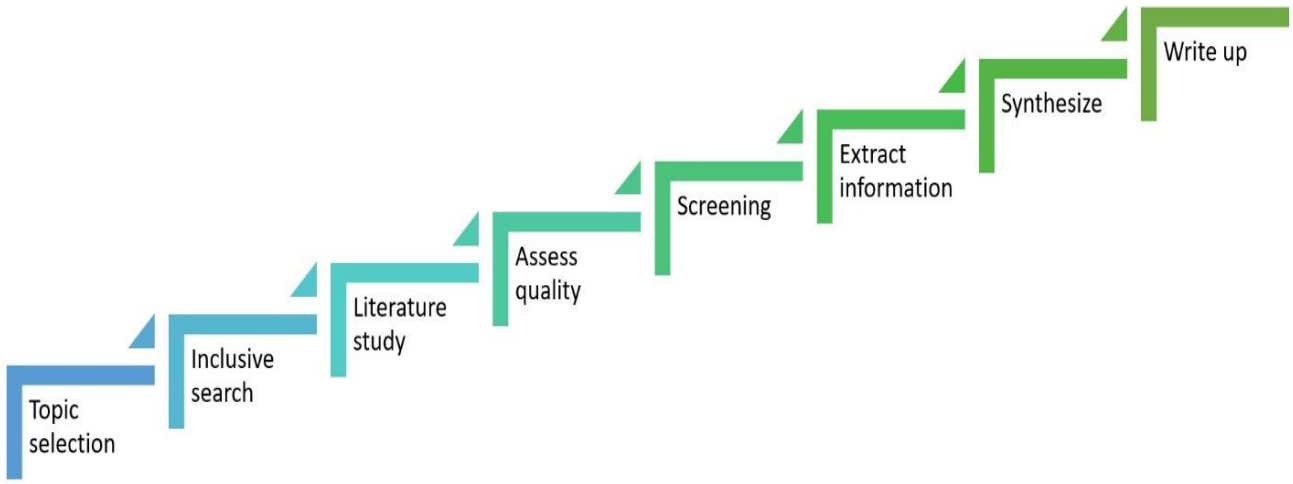

Figure 5. The procedure of systematic review conducted by the study.

Results and Discussion

AI and ML for energy production

The application of AI and ML can offer advantageous improvements in the optimization of power generation. The utilization of AI and ML in the energy industry within emerging nations holds significant potential for positive outcomes. Some potential solutions include the use of predictive maintenance techniques, exploration of alternative energy sources, effective grid management strategies, utilization of ML algorithms to address energy consumption challenges, and enhancement of energy efficiency in both residential and commercial buildings. Figure 6 provides a comprehensive overview of the significance of AI and ML in the production and utilization of energy.

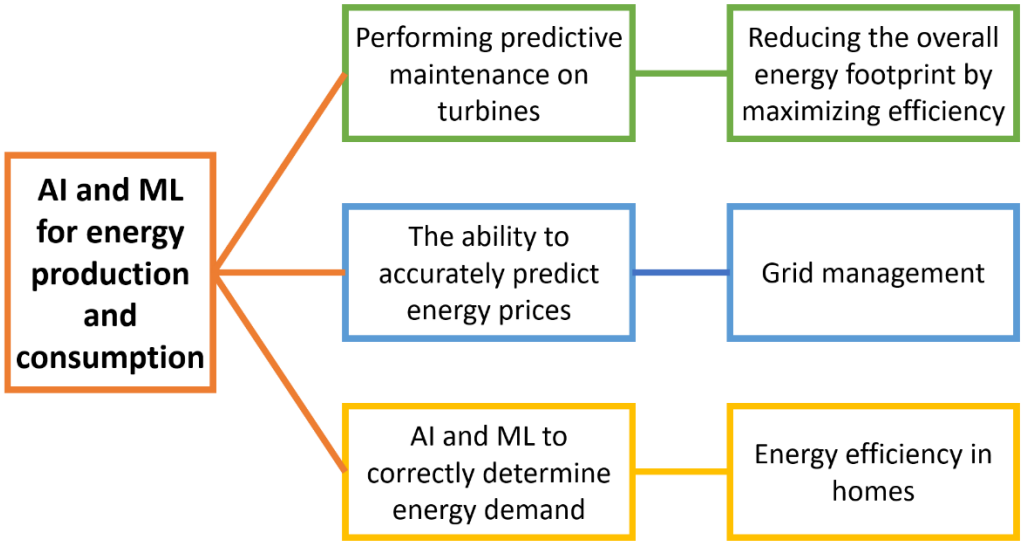

Figure 6. AI and ML for energy production.

Predictive turbine maintenance and energy optimization

The concept of "predictive maintenance" encompasses the utilization of diverse methods and strategies for data analysis, to detect anomalies in the operation of machinery and processes, as well as identifying prospective deficiencies in these components, to address these concerns before they escalate into severe failures. The approach in question was devised by IBM during the 1980s. Stetco et al. (2019) investigated the employment of ML models to monitor the status of wind turbines, specifically focusing on tasks such as blade defect detection and generator temperature monitoring. Various models are classified using standard ML procedures, which encompass data sources, feature extraction and selection, model selection (classification, regression), model validation, and decision-making. Stetco et al. (2019) asserted that the majority of models rely on simulated data. The majority of the remaining procedures rely primarily on regression analysis, while just around one-third of them incorporate categorization techniques. The predominant technologies employed in many domains are neural networks, support vector machines, and decision trees.

Furthermore, Hsu et al. (2020) conducted an analysis on a dataset of 2.8 million sensor data points obtained from 31 wind turbines located in Taiwan. These turbines were installed within the timeframe of 2015 to 2017. The primary objective of the analysis was to identify flaws in the wind turbines and predict the extent of maintenance that would be necessary. The study utilized historical data on wind turbines obtained from Taiwan's Changhua Coastal Industrial Park to examine and predict the maintenance needs of these turbines. During the period spanning from 2015 to 2017, a cohort of 31 wind turbines amassed a cumulative sum of 2,815,104 observations. By employing two distinct methodologies in ML, viz. decision trees and random forest classifications, Hsu et al. (2020) reported a noteworthy accuracy rate of over 92% in the prediction of abnormalities in wind turbines. The analysis of sensor data from wind turbines prioritized the utilization of maintenance checklist insights offered by practitioners. Besides, Hsu et al. (2020) conducted research to identify the underlying causes of wind turbine malfunctions. The study collected and analyzed data on both abnormal and normal stages of wind turbine operation and utilized a combination of data analytics and domain expertise to construct predictive models. The results of this study offer practical insights for Taipower and other wind turbine operators in the identification of turbine malfunctions and the prediction of future maintenance needs.

The topic of energy consumption has garnered significant attention from individuals in both domestic and professional settings for an extended period (Raihan, 2023q). Nevertheless, in the absence of doing a substantial quantity of manual calculations, our ability to precisely determine the specific appliances or devices that consume the highest amount of energy has been limited. The aforementioned circumstances have been disrupted due to the widespread use of IoT devices and smart meters. Non-intrusive appliance load monitoring (NIALM), alternatively referred to as disaggregation, is a technique that uses ML algorithms to examine energy usage at an individual device level. By employing this equation, it becomes straightforward to ascertain the home appliances that exhibit the most elevated monthly operational expenditures. Customers who employ this technology will have the capacity to effectively modify their consumption habits, enabling them to achieve cost savings and reduce their energy consumption. Individuals have the choice to either reduce the frequency of using costly appliances or substitute them with more energy-efficient alternatives.

Grid management and energy price prediction

The field of data analytics is gaining significance in the current era of industrialization (Yeo, 2023). The electricity sector has achieved notable advancements in the adoption of data analytics methodologies. The installation of smart meters and other sensors in the smart grid has resulted in a substantial accumulation of data (Chen et al., 2023). The utilization of big data analytics is imperative to effectively handle an extensive quantity of diverse data. The integration of big data analytics and ML algorithms plays a crucial role in the functioning of the electrical transmission and distribution network. These components are essential for various tasks such as data collecting, storage, and analysis, as well as prediction for data forecasting and system maintenance (Strielkowski et al., 2023). According to Li et al. (2022), the implementation of these techniques has the potential to enhance customer service and societal welfare, as well as optimize the distribution of energy in terms of efficiency, affordability, quality, and cost.

In the realm of manufacturing, smart grids have the potential to aid firms in monitoring energy use and mitigating the prevalence of unauthorized power connections, which are notable challenges encountered in poor nations (Raza et al., 2022). One further concern pertains to the growing trend among individuals and businesses to assert their autonomy in power generation, facilitated by the increasing accessibility and affordability of personal techniques such as solar or wind power (Sun et al., 2023). Individuals possessing power generation systems can generate, utilize, and store their energy resources. The possibility of selling surplus electricity to the local power company is contingent upon the geographical location of the individual or entity in question. The determination of optimal periods for energy generation, storage, or sale can be accomplished by the application of ML techniques (Ahmad et al., 2022). According to Umar et al. (2022), in an ideal scenario, customers would engage in the use or storage of energy during periods of low costs, afterward capitalizing on the opportunity to sell it back to the system during periods of high prices. To enhance the accuracy of hourly forecasts, it is feasible to employ ML models for the analysis of historical data, consumption patterns, and meteorological predictions (Mayer et al., 2023). Individuals and businesses with personal or commercial energy-producing systems can utilize this information to inform their decision-making process on the optimal utilization of their energy resources. An example that may be cited is the Adaptive Neural Fuzzy Inference System (ANFIS), which has been utilized to predict the immediate wind patterns required for electricity generation. As a result of this phenomenon, producers can attain their maximum levels of energy production and subsequently trade this energy back into the grid during periods when prices are at their peak (Wu et al., 2023). Given the abundance of available information, it is imperative for both enterprises and governments to proactively engage in the investment of AI

and ML technologies. This strategic approach will facilitate effective grid management and enable correct estimation of energy pricing.

AI and ML to accurately assess residential energy demand and efficiency

The escalating global energy demand has prompted significant apprehensions regarding potential supply constraints, depletion of energy resources, and detrimental impacts on the environment, including ozone layer depletion, global warming, and climate change (Raihan et al., 2023g; Raihan, 2023r). According to Cao et al. (2016), the energy consumption of residential and commercial structures surpasses that of other prominent industries, such as manufacturing and transportation. These structures account for approximately 20 to 40 percent of global energy consumption. The upward trajectory in energy consumption is anticipated to persist in the foreseeable future due to population growth, heightened demands for comfort and building amenities, and an increase in indoor occupancy duration (González-Torres et al., 2022). Consequently, energy policy at several levels, including regional, national, and worldwide, has prioritized the enhancement of energy efficiency within buildings. The increase in energy usage in building services, specifically attributed to HVAC systems, is a prominent observation. These systems contribute to fifty percent of the overall energy consumption in buildings and twenty percent of the total energy consumption in the United States (Cao et al., 2016).

Another important aspect to consider about AI and ML is the energy efficiency in residential buildings (Mazhar et al., 2022). The increasing popularity of smart home systems in recent years can be attributed to their ability to enhance both comfort and quality of life (Goudarzi et al., 2022). The IoT has garnered considerable attention within the electrical industry due to its emergence as a critical application for smart home technology. This development has positioned IoT as a prominent and indispensable use case for this technology. Smart lighting is a prominent platform within the realm of IoT technology, as highlighted by Yudidharma et al. (2023), particularly in the context of smart houses. The phrase "smart lighting" is frequently employed to describe lighting devices that offer enhanced functionality, such as remote dimming or on/off control, to improve user comfort and minimize energy consumption. The intelligent LED bulb can generate a diverse array of hues, with each color necessitating a specific amount of electrical power. According to a recent study conducted by Aussat et al. (2022), the utilization of smart LED bulbs inside smart lighting systems has demonstrated notable improvements in energy efficiency. A comprehensive analysis is conducted to assess the energy-saving potential of halogen, compact fluorescent lamp (CFL), light-emitting diode (LED), and smart LED technologies. The perception of minimal energy usage is only achieved when a smart LED light is both dimmed and remotely controlled. Efficiency in energy utilization within commercial buildings is a significant part of AI and ML (Khan et al., 2023). According to Robinson et al. (2017), buildings account for 40% of the total energy use in the United States.

A comprehensive comprehension of energy intensity distribution is crucial for urban planners. The use of energy within buildings is influenced by urban form factors, such as density and floor-area ratios (FAR) (Liu et al., 2023). The building sector plays a substantial role in the overall energy consumption of the country, hence giving rise to many environmental challenges that pose a threat to human sustainability (Raihan, 2023s). The utilization of energy forecasting in the context of building operations is gaining traction due to its potential to mitigate energy consumption and yield cost savings (Raihan, 2023t). In addition, the use of energy-efficient building designs will play a significant role in diminishing the aggregate energy consumption of newly constructed edifices. ML is widely recognized as a highly successful methodology for achieving desired outcomes in prediction tasks (Olu-Ajayi et al., 2022). The investigation of potential sources of energy is a significant area of study (Raihan et al., 2023u). Although the Earth's seas encompass around 71% of its surface area, there exists a

dearth of knowledge regarding the characteristics and attributes of the underlying structures inside these expansive aquatic environments. Recent advancements in marine robotics and AI have the potential to significantly reduce the enigma surrounding the ocean floor (Agarwala, 2023). The expanding number of spacecraft voyaging beyond the confines of the solar system has resulted in a growing disparity between our knowledge of outer space and our understanding of the Earth's oceans (Morrow et al., 2023). Developing nations are compelled to harness the promise offered by AI and ML. This necessitates a substantial transformation in policy within both the public and private sectors, along with the establishment of productive collaborations between the two. Given the absence of a feasible solution for the bulk storage of substantial quantities of energy, it becomes imperative for utility providers to precisely assess the energy demands of their clientele. This implies that energy must be promptly transferred and utilized following its generation. The application of ML and AI has the potential to enhance the accuracy of these projections.

According to Mariano-Hernández et al. (2020), the estimation of daily energy consumption can be facilitated by examining records of energy usage, referring to weather forecasts, and taking into account the operational status of various establishments and structures. An example of this phenomenon can be observed in the heightened energy consumption during a hot summer day occurring on a weekday when business establishments are compelled to operate their air conditioning systems at maximum capacity (Sanzana et al., 2023). During the summer season, the occurrence of rolling blackouts can be attributed to the excessive use of air conditioners. However, the implementation of preventive measures such as the utilization of weather forecasts and historical data can effectively mitigate these blackouts, provided that they are discovered promptly. When attempting to elucidate fluctuations in demand, ML algorithms seek intricate patterns within a multitude of contributing factors, encompassing variables such as the day of the week, the specific time of day, anticipated wind and solar radiation levels, significant sporting occasions, historical demand patterns, average demand levels, ambient air temperature, humidity, and atmospheric pressure, as well as wind direction (Pallonetto et al., 2022; Benti et al., 2023). ML predictions exhibit higher accuracy compared to human predictions due to the ability of ML algorithms to identify and discern subtle patterns more comprehensively. According to Arumugam et al. (2022), it is evident that there exists the potential to enhance efficiency and reduce expenses in energy procurement without necessitating excessively expensive modifications. According to Serban and Lytras (2020), in light of prospective shifts in market complexity, fluctuations in demand, the emergence of virtual clients, and other pertinent considerations, it is contended that renewable energy systems may lack dependability in the absence of adequate storage capacity. An examination of recent advancements reveals that AI has the potential to provide optimization even in situations where there is a lack of extensive long-term meteorological data.

Recommendations for emerging energy markets to maximize AI and ML

Figure 7 illustrates the significance of establishing effective and efficient partnerships between the public and private sectors when implementing AI and ML in emerging markets. Additionally, it emphasizes the necessity of government-sponsored investments in AI and ML within the energy sector. Furthermore, the development of accountable and robust AI methods, the establishment of reliable performance evaluation measures for AI models, and a comprehensive understanding of power system measurements concerning physics, design, and engineering are also crucial considerations. The utilization of AI and ML is becoming prevalent in the public and governmental domains, with a particular emphasis on its application within the electrical and energy sectors. The direct application of AI-based technology to power systems carries inherent risks, mostly stemming from the need to meet stringent standards related to reliability, accountability, and explainability. This is due to the

exorbitant expenses linked to cascading failures and extensive blackouts, which are deemed unaffordable for society.

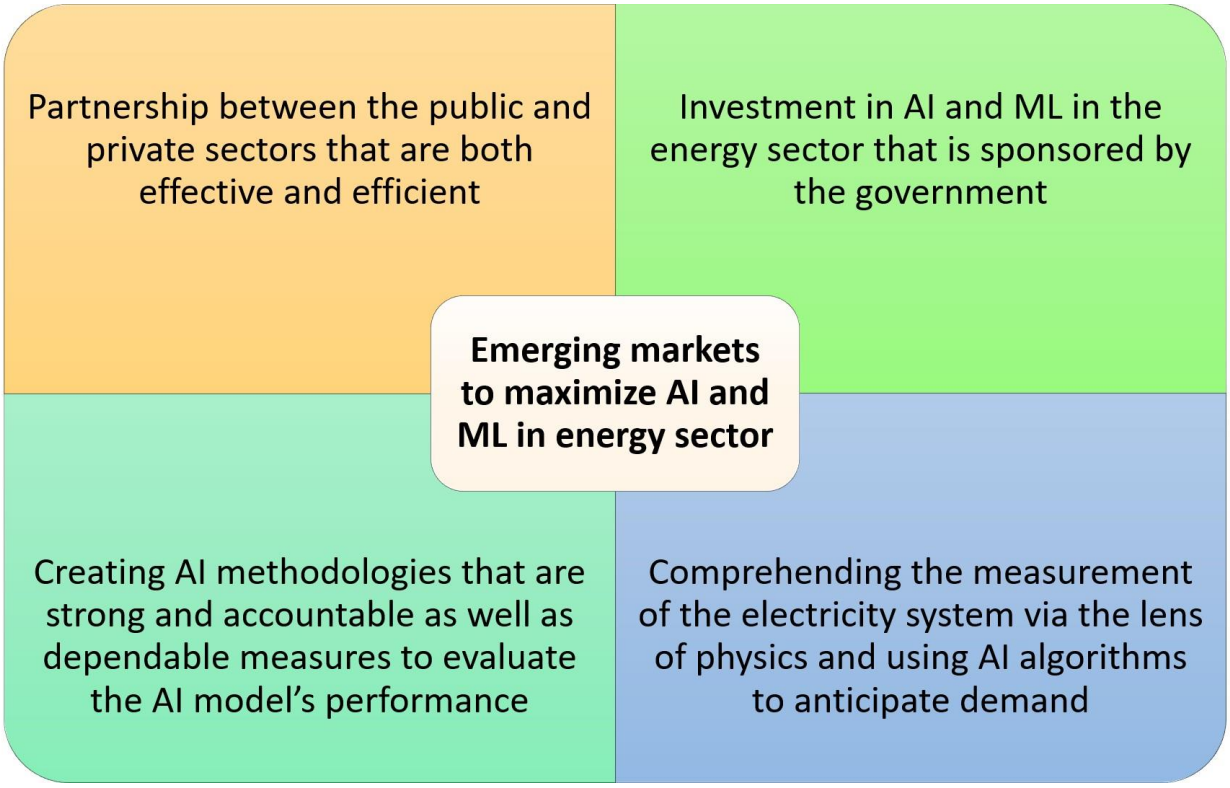

Figure 7. Effective AI and ML proposals for emerging markets.

Conclusion

Globally, the energy sector faces a diverse array of challenges, encompassing factors such as increasing energy use and the need for improved efficiency, shifting patterns in supply and demand, and a dearth of adequate analytical tools for effective management. In emerging markets, these issues manifest themselves with greater severity. The presence of numerous illicit connections to the electrical grid results in a considerable quantity of energy that remains unaccounted for and uncompensated. Therefore, the present study employed the systematic literature review methodology to examine the challenges arising from frequent power outages and limited energy accessibility. The objective of this study is to provide a comprehensive review of the potential contributions of AI and ML technologies toward the advancement of energy generation in developing countries. The findings indicate that AI and ML possess the capacity to effectively contribute to the enhancement of energy consumption optimization, grid management, accurate estimation of energy pricing, and precise determination of energy demand and efficiency in residential buildings. Furthermore, it has been determined that investments and the implementation of AI and ML techniques in the energy industry necessitate both accountability and robustness, necessitating the establishment of dependable metrics for evaluating the efficacy of AI models. Furthermore, it has been determined that a comprehensive comprehension of power system measurements within the context of quantum physics, design principles, and ML framework is crucial in the application of AI and ML in growing markets. The maintenance of a reliable energy supply is crucial for promoting the productivity of enterprises in emerging countries and facilitating the attainment of their development goals.

One of the limitations inherent in this study pertains to the exclusion of AI policies, a crucial aspect in the advancement of the energy industry and the enhancement of energy efficiency. There is significant variation in AI policy across different countries. However, despite the known trends in the utilization of AI and ML in the energy industry, further research is evidently required to determine the most effective solutions in numerous scenarios. Indeed, a significant number of the suggested solutions exhibit a deficiency in terms of testing and validation, particularly through real-life trials and research undertaken on a broad scale. Therefore, it is imperative to undertake more research endeavors, in conjunction with industrial projects and extensive experimentation, in order to facilitate the development of more precise models and AI solutions. This trajectory will facilitate the integration of AI and ML techniques into the energy sector, leading to their widespread adoption and incorporation in developing countries.

Declaration

Acknowledgment: The author would like to thank Dewan Ahmed Muhtasim (DAM) and Mostafizur Rahman for their motivation that inspired the author to write this article.

Conflict of interest: The author declares no conflict of interest.

Funding: This research received no funding

Authors contribution: Asif Raihan contributed to conceptualization, visualization, methodology, reviewing literature, extracting information, synthesize, and manuscript writing.

Data availability: No new data were created or analyzed in this study. Data sharing is not applicable to this article.

References

Agarwala, N. (2023). Using Robotics to Achieve Ocean Sustainability During the Exploration Phase of Deep Seabed Mining. *Marine Technology Society Journal*, *57*(1), 130-150.

Ahmad, T., Madonski, R., Zhang, D., Huang, C., & Mujeeb, A. (2022). Data-driven probabilistic machine learning in sustainable smart energy/smart energy systems: Key developments, challenges, and future research opportunities in the context of smart grid paradigm. *Renewable and Sustainable Energy Reviews*, *160*, 112128.

Ali, A. Z., Rahman, M. S., & Raihan, A. (2022). Soil carbon sequestration in agroforestry systems as a mitigation strategy of climate change: a case study from Dinajpur, Bangladesh. *Advances in Environmental and Engineering Research,* 3(4), 1-15.

Arumugam, K., Swathi, Y., Sanchez, D. T., Mustafa, M., Phoemchalard, C., Phasinam, K., & Okoronkwo, E. (2022). Towards applicability of machine learning techniques in agriculture and energy sector. *Materials Today: Proceedings*, *51*, 2260-2263.

Attri, I., Awasthi, L. K., Sharma, T. P., & Rathee, P. (2023). A review of deep learning techniques used in agriculture. *Ecological Informatics, 77*, 102217.

Aussat, Y., Rosmanis, A., & Keshav, S. (2022). A power-efficient self-calibrating smart lighting system. *Energy and Buildings*, *259*, 111874.

Begum, R. A., Raihan, A., & Said, M. N. M. (2020). Dynamic impacts of economic growth and forested area on carbon dioxide emissions in Malaysia. *Sustainability,* 12(22), 9375.

Benedek, A., Rokicki, T., & Szeberényi, A. (2023). Bibliometric Evaluation of Energy Efficiency in Agriculture. *Energies*, *16*(16), 5942.

Benita, F. (2021). Human mobility behavior in COVID-19: A systematic literature review and bibliometric analysis. *Sustainable Cities and Society*, *70*, 102916.

Benti, N. E., Chaka, M. D., & Semie, A. G. (2023). Forecasting Renewable Energy Generation with Machine learning and Deep Learning: Current Advances and Future Prospects. *Sustainability*, *15*(9), 7087.

Bharadiya, J. P. (2023). A Comparative Study of Business Intelligence and Artificial Intelligence with Big Data Analytics. *American Journal of Artificial Intelligence*, *7*(1), 24.

Budd, S., Robinson, E. C., & Kainz, B. (2021). A survey on active learning and human-in-the-loop deep learning for medical image analysis. *Medical Image Analysis*, *71*, 102062.

Cao, X., Dai, X., & Liu, J. (2016). Building energy-consumption status worldwide and the state-of-the-art technologies for zero-energy buildings during the past decade. *Energy and buildings*, *128*, 198-213.

Chen, C., Zuo, Y., Ye, W., Li, X., Deng, Z., & Ong, S. P. (2020). A critical review of machine learning of energy materials. *Advanced Energy Materials*, *10*(8), 1903242.

Chen, Z., Amani, A. M., Yu, X., & Jalili, M. (2023). Control and Optimisation of Power Grids Using Smart Meter Data: A Review. *Sensors*, *23*(4), 2118.

Coraci, D., Brandi, S., & Capozzoli, A. (2023). Effective pre-training of a deep reinforcement learning agent by means of long short-term memory models for thermal energy management in buildings. *Energy Conversion and Management*, *291*, 117303.

Cunha, B. Z., Droz, C., Zine, A. M., Foulard, S., & Ichchou, M. (2023). A review of machine learning methods applied to structural dynamics and vibroacoustic. *Mechanical Systems and Signal Processing*, *200*, 110535.

Danish, M. S. S. (2023). AI in Energy: Overcoming Unforeseen Obstacles. *AI*, *4*(2), 406-425.

Das, A., Saini, V., Parikh, K., Parikh, J., Ghosh, P., & Tot, M. (2023). Pathways to net zero emissions for the Indian power sector. *Energy Strategy Reviews*, *45*, 101042.

Ghiasi, M., Niknam, T., Wang, Z., Mehrandezh, M., Dehghani, M., & Ghadimi, N. (2023). A comprehensive review of cyber-attacks and defense mechanisms for improving security in smart grid energy systems: Past, present and future. *Electric Power Systems Research*, *215*, 108975.

Ghoddusi, H., Creamer, G. G., & Rafizadeh, N. (2019). Machine learning in energy economics and finance: A review. *Energy Economics*, *81*, 709-727.

Ghosh, S., Hossain, M. S., Voumik, L. C., Raihan, A., Ridzuan, A. R., & Esquivias, M. A. (2023). Unveiling the Spillover Effects of Democracy and Renewable Energy Consumption on the Environmental Quality of BRICS Countries: A New Insight from Different Quantile Regression Approaches. *Renewable Energy Focus*, 46, 222-235.

González-Torres, M., Pérez-Lombard, L., Coronel, J. F., Maestre, I. R., & Yan, D. (2022). A review on buildings energy information: Trends, end-uses, fuels and drivers. *Energy Reports*, *8*, 626-637.

Goudarzi, A., Ghayoor, F., Waseem, M., Fahad, S., & Traore, I. (2022). A Survey on IoT-Enabled Smart Grids: Emerging, Applications, Challenges, and Outlook. *Energies*, *15*(19), 6984.

Hsu, J. Y., Wang, Y. F., Lin, K. C., Chen, M. Y., & Hsu, J. H. Y. (2020). Wind turbine fault diagnosis and predictive maintenance through statistical process control and machine learning. *Ieee Access*, *8*, 23427-23439.

Hua, C., Cao, X., Liao, B., & Li, S. (2023). Advances on intelligent algorithms for scientific computing: an overview. *Frontiers in Neurorobotics*, *17*, 1190977.

IBM. (2023). What is artificial intelligence (AI)?. Available at: https://www.ibm.com/topics/artificial-intelligence (Accessed on 18 August 2023)

Isfat, M., & Raihan, A. (2022). Current practices, challenges, and future directions of climate change adaptation in Bangladesh. *International Journal of Research Publication and Reviews,* 3(5), 3429-3437.

Jaafar, W. S. W. M., Maulud, K. N. A., Kamarulzaman, A. M. M., Raihan, A., Sah, S. M., Ahmad, A., Saad, S. N. M., Azmi, A. T. M., Syukri, N. K. A. J., & Khan, W. R. (2020). The influence of forest degradation on land surface temperature–a case study of Perak and Kedah, Malaysia. *Forests,* 11(6), 670.

Kataray, T., Nitesh, B., Yarram, B., Sinha, S., Cuce, E., Shaik, S., ... & Roy, A. (2023). Integration of smart grid with renewable energy sources: Opportunities and challenges–A comprehensive review. *Sustainable Energy Technologies and Assessments*, *58*, 103363.

Kaur, D., Uslu, S., Rittichier, K. J., & Durresi, A. (2022). Trustworthy artificial intelligence: a review. *ACM Computing Surveys (CSUR)*, *55*(2), 1-38.

Khan, S. U., Khan, N., Ullah, F. U. M., Kim, M. J., Lee, M. Y., & Baik, S. W. (2023). Towards intelligent building energy management: AI-based framework for power consumption and generation forecasting. *Energy and Buildings*, *279*, 112705.

Kumar, J. R. R., Dhabliya, D., & Dari, S. S. (2023). A comparative study of machine learning algorithms for image recognition in privacy protection and crime detection. *International Journal of Intelligent Systems and Applications in Engineering*, *11*(9s), 482-490.

Kurup, P. M., Li, X., Dong, Y., Bhardwaj, M., & Yang, Y. (2023). Co-Creating Interdisciplinary Integrated Powerful Knowledge. *Encyclopedia*, *3*(3), 964-971.

LeCun, Y., Bengio, Y., & Hinton, G. (2015). Deep learning. *nature*, *521*(7553), 436-444.

Lee, S., Nguyen, N. H., Karamanli, A., Lee, J., & Vo, T. P. (2023). Super learner machine-learning algorithms for compressive strength prediction of high performance concrete. *Structural Concrete*, *24*(2), 2208-2228.

Li, C., Chen, Y., & Shang, Y. (2022). A review of industrial big data for decision making in intelligent manufacturing. *Engineering Science and Technology, an International Journal*, *29*, 101021.

Lin, L., Gao, L., Kedzierski, M. A., & Hwang, Y. (2022). A general model for flow boiling heat transfer in microfin tubes based on a new neural network architecture. *Energy and AI*, *8*, 100151.

Liu, K., Xu, X., Zhang, R., Kong, L., Wang, W., & Deng, W. (2023). Impact of urban form on building energy consumption and solar energy potential: A case study of residential blocks in Jianhu, China. *Energy and Buildings*, *280*, 112727.

Liu, Y., Esan, O. C., Pan, Z., & An, L. (2021). Machine learning for advanced energy materials. *Energy and AI*, *3*, 100049.

Makala, B., & Bakovic, T. (2020). *Artificial intelligence in the power sector*. International Finance Corporation: Washington, DC, USA.

Mariano-Hernández, D., Hernández-Callejo, L., García, F. S., Duque-Perez, O., & Zorita-Lamadrid, A. L. (2020). A review of energy consumption forecasting in smart buildings: Methods, input variables, forecasting horizon and metrics. *Applied Sciences*, *10*(23), 8323.

Mayer, M. J., Biró, B., Szücs, B., & Aszódi, A. (2023). Probabilistic modeling of future electricity systems with high renewable energy penetration using machine learning. *Applied Energy*, *336*, 120801.

Mazhar, T., Malik, M. A., Haq, I., Rozeela, I., Ullah, I., Khan, M. A., ... & Hamam, H. (2022). The Role of ML, AI and 5G Technology in Smart Energy and Smart Building Management. *Electronics*, *11*(23), 3960.

McCarthy, J. (2007). From here to human-level AI. *Artificial Intelligence*, *171*(18), 1174-1182.

Morrow, R., Fu, L. L., Rio, M. H., Ray, R., Prandi, P., Le Traon, P. Y., & Benveniste, J. (2023). Ocean circulation from space. *Surveys in Geophysics*, 1-44.

Nabavi, S. A., Aslani, A., Zaidan, M. A., Zandi, M., Mohammadi, S., & Motlagh, N. H. (2020). Machine learning modeling for energy consumption of residential and commercial sectors. *Energies*, *13*(19), 5171.

Okoroafor, E. R., Smith, C. M., Ochie, K. I., Nwosu, C. J., Gudmundsdottir, H., & Aljubran, M. J. (2022). Machine learning in subsurface geothermal energy: Two decades in review. *Geothermics*, *102*, 102401.

Olu-Ajayi, R., Alaka, H., Sulaimon, I., Sunmola, F., & Ajayi, S. (2022). Building energy consumption prediction for residential buildings using deep learning and other machine learning techniques. *Journal of Building Engineering*, *45*, 103406.

Pallonetto, F., Jin, C., & Mangina, E. (2022). Forecast electricity demand in commercial building with machine learning models to enable demand response programs. *Energy and AI*, *7*, 100121.

Raihan, A. (2023a). A review of the global climate change impacts, adaptation strategies, and mitigation options in the socio-economic and environmental sectors. *Journal of Environmental Science and Economics*, 2(3), 36-58.

Raihan, A. (2023b). Sustainable development in Europe: A review of the forestry sector's social, environmental, and economic dynamics. *Global Sustainability Research,* 2(3), 72-92.

Raihan, A. (2023c). A review of tropical blue carbon ecosystems for climate change mitigation. *Journal of Environmental Science and Economics, 2*(4), 14-36.

Raihan, A. (2023d). An overview of the energy segment of Indonesia: present situation, prospects, and forthcoming advancements in renewable energy technology. *Journal of Technology Innovations and Energy*, 2(3), 37-63.

Raihan, A. (2023e). A concise review of technologies for converting forest biomass to bioenergy. *Journal of Technology Innovations and Energy*, 2(3), 10-36.

Raihan, A. (2023f). An econometric assessment of the relationship between meat consumption and greenhouse gas emissions in the United States. *Environmental Processes*, 10(2), 32.

Raihan, A. (2023g). Economy-energy-environment nexus: the role of information and communication technology towards green development in Malaysia. *Innovation and Green Development*, 2, 100085.

Raihan, A. (2023h). Toward sustainable and green development in Chile: dynamic influences of carbon emission reduction variables. *Innovation and Green Development*, 2, 100038.

Raihan, A. (2023i). The dynamic nexus between economic growth, renewable energy use, urbanization, industrialization, tourism, agricultural productivity, forest area, and carbon dioxide emissions in the Philippines. *Energy Nexus,* 9, 100180.

Raihan, A. (2023j). The contribution of economic development, renewable energy, technical advancements, and forestry to Uruguay's objective of becoming carbon neutral by 2030. *Carbon Research*, 2, 20.

Raihan, A. (2023k). The influence of meat consumption on greenhouse gas emissions in Argentina. *Resources, Conservation & Recycling Advances* 19, 200183.

Raihan, A. (2023l). An econometric evaluation of the effects of economic growth, energy use, and agricultural value added on carbon dioxide emissions in Vietnam. *Asia-Pacific Journal of Regional Science*, 7, 665-696.

Raihan, A. (2023m). Nexus between economy, technology, and ecological footprint in China. *Journal of Economy and Technology*. https://doi.org/10.1016/j.ject.2023.09.003

Raihan, A. (2023n). Green energy and technological innovation towards a low-carbon economy in Bangladesh. *Green and Low-Carbon Economy*. https://doi.org/10.47852/bonviewGLCE32021340

Raihan, A. (2023o). The influences of renewable energy, globalization, technological innovations, and forests on emission reduction in Colombia. *Innovation and Green Development*, 2, 100071.

Raihan, A. (2023p). Nexus between Greenhouse gas emissions and its determinants: the role of renewable energy and technological innovations towards green development in South Korea. *Innovation and Green Development,* 2, 100066.

Raihan, A. (2023q). Exploring Environmental Kuznets Curve and Pollution Haven Hypothesis in Bangladesh: The Impact of Foreign Direct Investment. *Journal of Environmental Science and Economics*, 2(1), 25-36.

Raihan, A. (2023r). A review on the integrative approach for economic valuation of forest ecosystem services. *Journal of Environmental Science and Economics,* 2(3), 1-18.

Raihan, A. (2023s). Economic growth and carbon emission nexus: the function of tourism in Brazil. *Journal of Economic Statistics*, 1(2), 68-80.

Raihan, A. (2023t). Nexus between economic growth, natural resources rents, trade globalization, financial development, and carbon emissions toward environmental sustainability in Uruguay. *Electronic Journal of Education, Social Economics and Technology,* 4(2), 55-65.

Raihan, A. (2023u). Nexus between information technology and economic growth: new insights from India. *Journal of Information Economics*, 1(2), 37-48.

Raihan, A., Begum, R. A., & Said, M. N. M. (2021a). A meta-analysis of the economic value of forest carbon stock. *Geografia–Malaysian Journal of Society and Space,* 17(4), 321-338.

Raihan, A., Begum, R. A., Said, M. N. M., & Abdullah, S. M. S. (2018). Climate change mitigation options in the forestry sector of Malaysia. *Journal Kejuruteraan,* 1, 89-98.

Raihan, A., Begum, R. A., Said, M. N. M., & Abdullah, S. M. S. (2019). A review of emission reduction potential and cost savings through forest carbon sequestration. *Asian Journal of Water, Environment and Pollution,* 16(3), 1-7.

Raihan, A., Begum, R. A., Said, M. N. M., & Pereira, J. J. (2021b). Assessment of carbon stock in forest biomass and emission reduction potential in Malaysia. *Forests,* 12(10), 1294.

Raihan, A., Begum, R. A., Said, M. N. M., & Pereira, J. J. (2022a). Dynamic impacts of energy use, agricultural land expansion, and deforestation on CO_2 emissions in Malaysia. *Environmental and Ecological Statistics,* 29, 477-507.

Raihan, A., Begum, R. A., Said, M. N. M., & Pereira, J. J. (2022b). Relationship between economic growth, renewable energy use, technological innovation, and carbon emission toward achieving Malaysia's Paris agreement. *Environment Systems and Decisions,* 42, 586-607.

Raihan, A., & Bijoy, T. R. (2023). A review of the industrial use and global sustainability of Cannabis sativa. *Global Sustainability Research,* 2(4), 1-29.

Raihan, A., Farhana, S., Muhtasim, D. A., Hasan, M. A. U., Paul, A., & Faruk, O. (2022c). The nexus between carbon emission, energy use, and health expenditure: empirical evidence from Bangladesh. *Carbon Research,* 1(1), 30.

Raihan, A., & Himu, H. A. (2023). Global impact of COVID-19 on the sustainability of livestock production. *Global Sustainability Research*, 2(2), 1-11.

Raihan, A., Ibrahim, S., & Muhtasim, D. A. (2023a). Dynamic impacts of economic growth, energy use, tourism, and agricultural productivity on carbon dioxide emissions in Egypt. *World Development Sustainability,* 2, 100059.

Raihan, A., Muhtasim, D. A., Farhana, S., Hasan, M. A. U., Paul, A., & Faruk, O. (2022d). Toward environmental sustainability: Nexus between tourism, economic growth, energy use and carbon emissions in Singapore. *Global Sustainability Research,* 1(2), 53-65.

Raihan, A., Muhtasim, D. A., Farhana, S., Hasan, M. A. U., Pavel, M. I., Faruk, O., Rahman, M., & Mahmood, A. (2022e). Nexus between economic growth, energy use, urbanization, agricultural productivity, and carbon dioxide emissions: New insights from Bangladesh. *Energy Nexus,* 8, 100144.

Raihan, A., Muhtasim, D. A., Farhana, S., Hasan, M. A. U., Pavel, M. I., Faruk, O., Rahman, M., & Mahmood, A. (2023b). An econometric analysis of Greenhouse gas emissions from different agricultural factors in Bangladesh. *Energy Nexus*, 9, 100179.

Raihan, A., Muhtasim, D. A., Farhana, S., Pavel, M. I., Faruk, O., & Mahmood, A. (2022f). Nexus between carbon emissions, economic growth, renewable energy use, urbanization, industrialization, technological innovation, and forest area towards achieving environmental sustainability in Bangladesh. *Energy and Climate Change,* 3, 100080.

Raihan, A., Muhtasim, D. A., Farhana, S., Rahman, M., Hasan, M. A. U., Paul, A., & Faruk, O. (2023c). Dynamic linkages between environmental factors and carbon emissions in Thailand. *Environmental Processes,* 10, 5.

Raihan, A., Muhtasim, D. A., Khan, M. N. A., Pavel, M. I., & Faruk, O. (2022g). Nexus between carbon emissions, economic growth, renewable energy use, and technological innovation towards achieving environmental sustainability in Bangladesh. *Cleaner Energy Systems*, 3, 100032.

Raihan, A., Muhtasim, D. A., Pavel, M. I., Faruk, O., & Rahman, M. (2022h). An econometric analysis of the potential emission reduction components in Indonesia. *Cleaner Production Letters*, 3, 100008.

Raihan, A., Muhtasim, D. A., Pavel, M. I., Faruk, O., & Rahman, M. (2022i). Dynamic impacts of economic growth, renewable energy use, urbanization, and tourism on carbon dioxide emissions in Argentina. *Environmental Processes,* 9, 38.

Raihan, A., Pavel, M. I., Muhtasim, D. A., Farhana, S., Faruk, O., & Paul, A. (2023d). The role of renewable energy use, technological innovation, and forest cover toward green development: Evidence from Indonesia. *Innovation and Green Development,* 2(1), 100035.

Raihan, A., Pereira, J. J., Begum, R. A., & Rasiah, R. (2023e). The economic impact of water supply disruption from the Selangor River, Malaysia. *Blue-Green Systems*, *5*(2), 102-120.

Raihan, A., Rashid, M., Voumik, L. C., Akter, S., & Esquivias, M. A. (2023e). The dynamic impacts of economic growth, financial globalization, fossil fuel energy, renewable energy, and urbanization on load capacity factor in Mexico. *Sustainability*, 15(18), 13462.

Raihan, A., & Said, M. N. M. (2022). Cost–benefit analysis of climate change mitigation measures in the forestry sector of Peninsular Malaysia. *Earth Systems and Environment,* 6(2), 405-419.

Raihan, A., & Tuspekova, A. (2022a). Nexus between energy use, industrialization, forest area, and carbon dioxide emissions: new insights from Russia. *Journal of Environmental Science and Economics,* 1(4), 1-11.

Raihan, A., & Tuspekova, A. (2022b). Dynamic impacts of economic growth, renewable energy use, urbanization, industrialization, tourism, agriculture, and forests on carbon emissions in Turkey. *Carbon Research,* 1(1), 20.

Raihan, A., & Tuspekova, A. (2022c). Toward a sustainable environment: Nexus between economic growth, renewable energy use, forested area, and carbon emissions in Malaysia. *Resources, Conservation & Recycling Advances,* 15, 200096.

Raihan, A., & Tuspekova, A. (2022d). Towards sustainability: dynamic nexus between carbon emission and its determining factors in Mexico. *Energy Nexus,* 8, 100148.

Raihan, A., & Tuspekova, A. (2022e). Dynamic impacts of economic growth, energy use, urbanization, tourism, agricultural value-added, and forested area on carbon dioxide emissions in Brazil. *Journal of Environmental Studies and Sciences,* 12(4), 794-814.

Raihan, A., & Tuspekova, A. (2022f). Dynamic impacts of economic growth, energy use, urbanization, agricultural productivity, and forested area on carbon emissions: new insights from Kazakhstan. *World Development Sustainability,* 1, 100019.

Raihan, A., & Tuspekova, A. (2022g). Nexus between emission reduction factors and anthropogenic carbon emissions in India. *Anthropocene Science,* 1(2), 295-310.

Raihan, A., & Tuspekova, A. (2022h). Nexus between economic growth, energy use, agricultural productivity, and carbon dioxide emissions: new evidence from Nepal. *Energy Nexus,* 7, 100113.

Raihan, A., & Tuspekova, A. (2022i). The nexus between economic growth, energy use, urbanization, tourism, and carbon dioxide emissions: New insights from Singapore. *Sustainability Analytics and Modeling*, 2, 100009.

Raihan, A., & Tuspekova, A. (2022j). Role of economic growth, renewable energy, and technological innovation to achieve environmental sustainability in Kazakhstan. *Current Research in Environmental Sustainability,* 4, 100165.

Raihan, A., & Tuspekova, A. (2022k). The nexus between economic growth, renewable energy use, agricultural land expansion, and carbon emissions: new insights from Peru. *Energy Nexus,* 6, 100067.

Raihan, A., & Tuspekova, A. (2023a). The role of renewable energy and technological innovations toward achieving Iceland's goal of carbon neutrality by 2040. *Journal of Technology Innovations and Energy*, 2(1), 22-37.

Raihan, A., & Tuspekova, A. (2023b). Towards net zero emissions by 2050: the role of renewable energy, technological innovations, and forests in New Zealand. *Journal of Environmental Science and Economics*, 2(1), 1-16.

Raihan, A., & Voumik, L. C. (2022a). Carbon emission dynamics in India due to financial development, renewable energy utilization, technological innovation, economic growth, and urbanization. *Journal of Environmental Science and Economics*, 1(4), 36-50.

Raihan, A., & Voumik, L. C. (2022b). Carbon emission reduction potential of renewable energy, remittance, and technological innovation: empirical evidence from China. *Journal of Technology Innovations and Energy*, 1(4), 25-36.

Raihan, A., Voumik, L. C., Nafi, S. M., & Kuri, B. C. (2022j). How Tourism Affects Women's Employment in Asian Countries: An Application of GMM and Quantile Regression. *Journal of Social Sciences and Management Studies*, 1(4), 57-72.

Raihan, A., Voumik, L. C., Yusma, N., & Ridzuan, A. R. (2023f). The nexus between international tourist arrivals and energy use towards sustainable tourism in Malaysia. *Frontiers in Environmental Science*, 11, 575.

Rao, K. R., & Rao, K. R. (2019). Wind Energy: Public Policy Issues and Public Perspectives. In *Wind Energy for Power Generation: Meeting the Challenge of Practical Implementation* (pp. 1331-1390). Springer International Publishing.

Raut, P., Nagarse, A., Mohite, S., Supe, S., Karpate, Y., & Deshpande, S. (2023). AI-guided energy optimization in HVAC system. *Scandinavian Journal of Information Systems*, *35*(2), 200-210.

Raza, M. A., Aman, M. M., Abro, A. G., Tunio, M. A., Khatri, K. L., & Shahid, M. (2022). Challenges and potentials of implementing a smart grid for Pakistan's electric network. *Energy Strategy Reviews*, *43*, 100941.

Robinson, C., Dilkina, B., Hubbs, J., Zhang, W., Guhathakurta, S., Brown, M. A., & Pendyala, R. M. (2017). Machine learning approaches for estimating commercial building energy consumption. *Applied energy*, *208*, 889-904.

Sanzana, M. R., Abdulrazic, M. O. M., Wong, J. Y., Maul, T., & Yip, C. C. (2023). Effects of external weather on the water consumption of thermal-energy-storage air-conditioning system. *Energy Nexus*, *10*, 100187.

Şerban, A. C., & Lytras, M. D. (2020). Artificial intelligence for smart renewable energy sector in europe—smart energy infrastructures for next generation smart cities. *IEEE access*, *8*, 77364-77377.

Shi, L., Wu, R., & Lin, B. (2023). Where will go for electric vehicles in China after the government subsidy incentives are abolished? A controversial consumer perspective. *Energy*, *262*, 125423.

Slama, S. B. (2022). Prosumer in smart grids based on intelligent edge computing: A review on Artificial Intelligence Scheduling Techniques. *Ain Shams Engineering Journal*, *13*(1), 101504.

Stetco, A., Dinmohammadi, F., Zhao, X., Robu, V., Flynn, D., Barnes, M., ... & Nenadic, G. (2019). Machine learning methods for wind turbine condition monitoring: A review. *Renewable energy*, *133*, 620-635.

Strielkowski, W., Vlasov, A., Selivanov, K., Muraviev, K., & Shakhnov, V. (2023). Prospects and Challenges of the Machine Learning and Data-Driven Methods for the Predictive Analysis of Power Systems: A Review. *Energies*, *16*(10), 4025.

Sultana, T., Hossain, M. S., Voumik, L. C., & Raihan, A. (2023a). Democracy, green energy, trade, and environmental progress in South Asia: Advanced quantile regression perspective. *Heliyon*, 9(10), e20488.

Sultana, T., Hossain, M. S., Voumik, L. C., & Raihan, A. (2023b). Does globalization escalate the carbon emissions? Empirical evidence from selected next-11 countries. *Energy Reports,* 10, 86-98.

Sun, A. Y., & Scanlon, B. R. (2019). How can Big Data and machine learning benefit environment and water management: a survey of methods, applications, and future directions. *Environmental Research Letters*, *14*(7), 073001.

Sun, L., Yin, J., & Bilal, A. R. (2023). Green financing and wind power energy generation: Empirical insights from China. *Renewable Energy*, *206*, 820-827.

Sutton, R. S. (2020). John McCarthy's definition of intelligence. *Journal of Artificial General Intelligence*, *11*(2), 66-67.

Talukdar, J., Singh, T. P., & Barman, B. (2023). Supervised Learning. In *Artificial Intelligence in Healthcare Industry* (pp. 51-86). Singapore: Springer Nature Singapore.

Tawfik, G. M., Dila, K. A. S., Mohamed, M. Y. F., Tam, D. N. H., Kien, N. D., Ahmed, A. M., & Huy, N. T. (2019). A step by step guide for conducting a systematic review and meta-analysis with simulation data. *Tropical medicine and health*, *47*(1), 1-9.

Umar, A., Kumar, D., & Ghose, T. (2022). Blockchain-based decentralized energy intra-trading with battery storage flexibility in a community microgrid system. *Applied Energy*, *322*, 119544.

Vassar, M., Atakpo, P., & Kash, M. J. (2016). Manual search approaches used by systematic reviewers in dermatology. *Journal of the Medical Library Association: JMLA*, *104*(4), 302.

Voumik, L. C., Islam, M. J., & Raihan, A. (2022). Electricity production sources and CO_2 emission in OECD countries: static and dynamic panel analysis. *Global Sustainability Research*, 1(2), 12-21.

Voumik, L. C., Mimi, M. B., & Raihan, A. (2023a). Nexus between urbanization, industrialization, natural resources rent, and anthropogenic carbon emissions in South Asia: CS-ARDL approach. *Anthropocene Science*, 2(1), 48-61.

Voumik, L. C., Ridwan, M., Rahman, M. H., & Raihan, A. (2023b). An Investigation into the Primary Causes of Carbon Dioxide Releases in Kenya: Does Renewable Energy Matter to Reduce Carbon Emission?. *Renewable Energy Focus*, 47, 100491.

Wang, H., Fu, T., Du, Y., Gao, W., Huang, K., Liu, Z., ... & Zitnik, M. (2023). Scientific discovery in the age of artificial intelligence. *Nature*, *620*(7972), 47-60.

Wirtz, B. W., Weyerer, J. C., & Kehl, I. (2022). Governance of artificial intelligence: A risk and guideline-based integrative framework. *Government Information Quarterly*, *39*(4), 101685.

Woods, J., James, N., Kozubal, E., Bonnema, E., Brief, K., Voeller, L., & Rivest, J. (2022). Humidity's impact on greenhouse gas emissions from air conditioning. *Joule*, *6*(4), 726-741.

Wu, C., Li, J., Liu, W., He, Y., & Nourmohammadi, S. (2023). Short-term electricity demand forecasting using a hybrid ANFIS–ELM network optimised by an improved parasitism–predation algorithm. *Applied Energy*, *345*, 121316.

Xu, W., Pan, Y., Chen, W., & Fu, H. (2019). Forecasting corporate failure in the Chinese energy sector: A novel integrated model of deep learning and support vector machine. *Energies*, *12*(12), 2251.

Yeo, K. S. (2023). The Future of Learning, Jobs, and Research [Highlights]. *IEEE Nanotechnology Magazine*, *17*(3), 5-9.

Yudidharma, A., Nathaniel, N., Gimli, T. N., Achmad, S., & Kurniawan, A. (2023). A systematic literature review: Messaging protocols and electronic platforms used in the internet of things for the purpose of building smart homes. *Procedia Computer Science*, *216*, 194-203.

Zekić-Sušac, M., Mitrović, S., & Has, A. (2021). Machine learning based system for managing energy efficiency of public sector as an approach towards smart cities. *International journal of information management*, *58*, 102074.

Zhou, H., Liu, Q., Yan, K., & Du, Y. (2021). Deep learning enhanced solar energy forecasting with AI-driven IoT. *Wireless Communications and Mobile Computing*, *2021*, 1-11.

Journal of Technology Innovations and Energy ISSN: 2957-8809
https://doi.org/10.56556/jtie.v2i4.656

RESEARCH ARTICLE

Digital Divide and Uptake of Public E-Service in Nigeria: A Narrative Review

Chima Paul[1*], Ekhator Victor Eghe[2]

[1]Department of Public Administration, University of Abuja, Nigeria

Corresponding Author: Chima paul: chima.paul@uniabuja.edu.ng

Received: 17 September, 2023, Accepted: 04 November, 2023, Published: 08 November, 2023

Abstract

The motivation for this study is to identify demand-side factors militating against the uptake of public e-services due to the digital divide. This study is primarily concerned with demand-side factors that influence people's proclivity to utilize e-services. The paper depended on a narrative examination of relevant literature on the issues at stake and inferences drawn from it. Demand side factors found militating against the uptake of public e-services in Nigeria due digital divide are categorized into three, namely, individual factors (age, income, etc); social factors (trust, language, etc) and infrastructural-related factors (limited access to broadband, cost digital infrastructure). The study recommends inter alia capacity building and orientation programmes on the importance and relevance of digital literacy in order to increase participation to bridge the digital divide, as well as the development of online content and other features in Nigerian languages that are not already available on the Internet.

Keywords: Digital Divide; Public E-Service; Nigeria; Narrative Review

Introduction

The provision of electronic services by governments to their citizens and businesses is known as public e-service and is fundamental to digital agendas and policies around the world. (Malodia, 2021). The utilization of e-governance in the delivery of public services has come to stay across the globe. This was made possible by the fact that delivering public services through e-government improves SMART (Simple, Moral, Accountable, Responsible, and Transparent) governance. Put differently, it is a system of governance that is: user-friendly, upholds ethical value, is answerable to the people, reacts quickly and positively and make documents, processes and functions open in the public domain. However, the uptake of public services via e-governance has been hampered by some factors thereby widening the digital gap between and among people. Common critical factors that determine the usage of e-governance across segments of people are income, education, gender, geographical location, etc. In addition, Dar and Ahmad (2022) also remarked that in places with no or very limited infrastructure, the digital divide persists. This study attempts to investigate and identify from documentary analysis any of these factors that affect the utilization of e-governance most in Nigeria from the demand side. The foregoing is pertinent due to the rising concern regarding why some populations use certain e-government functions while others do not, given the availability of a wider range of e-government services. The study is also more important since digital inequality might impede and worsen e-Government programmes [if not effectively addressed] (Belanger & Carter, 2009).

Once more, it can be argued that the utilisation of advanced information technology (IT) in government has limited social impact when individuals encounter difficulties in accessing services or effectively engaging in political processes (Chima, 2022). Similarly, understanding the development and usage of IT in government without taking a demand perspective into consideration could lead to only partial interpretations of a complicated social reality (2009). Supporting this assertion, Reddick (2005) subscribes to the preceding idea that much of the existing e-Government literature examined digital divide from the supply-side perspective, and more attention to demand-side issues is required.

Importantly, the study becomes more distinctive on the ground that using the supply-side viewpoint, a rapidly growing body of empirical studies (Zhao et al., 2014, Das et al., 2017; Glyptis et al., 2020;) have evaluated the efficacy of e-government programmes. Conversely, not many studies have examined empirically the demand-side factors that affect citizens' utilization of the e-government system. In addition, the study is important since, according to Okwor (2009), Nigeria had the lowest accessibility and usage of mobile broadband from Nokia Siemens Networks among the fifty African countries. Hence, this study provides policymakers with a distinctive viewpoint on the demand-side variables that impede the adoption of public services in Nigeria, thereby enabling the formulation of effective public policy interventions to address this issue. Finally, empirical research on the demand side factors should be encouraged in future studies by employing quantitative methods.

To achieve the purpose of this study, the paper is divided into the following sections. Section one is the introduction, followed by section two which reviews the relevant literature related to the study. Section three dwells on the methodology of the study while section four presents the results and discussions and the last chapter is the conclusion.

Literature Review

Digital Divide: Initially, disparities in computer access were referred to as the "digital divide." The phrase changed to include gaps in both computer and internet access as the internet quickly spread throughout society and established itself as a key form of computing (Van Deursen & Van Dijk, 2011, Afzal, 2023). ICT OECD (2001) made a similar claim that the phrase "digital divide" was used indiscriminately to refer to either the gap in people's access to ICTs or more specifically, the gap in their access to the internet when research on the issue initially got started. There have been attempts to completely explain the digital divide in terms of both access and use from the late 1990s to the present. Thus, digital divide can be viewed from two dimensions, that is, the gap in access and use. "Digital divide" refers to citizens having varying degrees of ICT access and the knowledge and experience needed to use it (Pérez-Morote, 2020). Similarly, Belanger & Carter (2009) assert that digital divide is the difference between those who have access to information and those who do not or between those who are computer savvy and those who are not. From this definition, it can be contended that two divides exist. These are the "divide in access and divide in skills". This is diagrammatically presented in figure 1 below.

A collection of literature (e.g Thomas, 2003; Mossberger et al, 2003; Hoffman, et al, 2006) recognised education, income, ethnicity and age as regularly important factors of access to technology. They concluded that a key component of the digital divide is the inability to access the Internet occasioned by the aforementioned factors. Additionally, Belanger & Carter, (2009) assert that a sizable portion of the populace lacks the skills to communicate online with the government. Technical competence and information literacy are two aspects of the divide in skills (Zhao et al, 2023). Technical competencies are "the skills required to operate hardware and software, such as typing, using a mouse, and instructing the computer to sort records in a specific manner," whereas information literacy is "the ability to recognize when information can solve a problem or fill a need and to effectively employ information resources" (Mossberger et al, 2003). According to Norris (2001), there are three distinct ways to think about the digital divide: globally (the difference in internet access between industrialized

and developing countries), socially (the information gap between the rich and poor), and democratically (the difference between those who do and do not use the variety of digital means to engage in public life).

Figure 1: Digital Divide and E-governance Usage

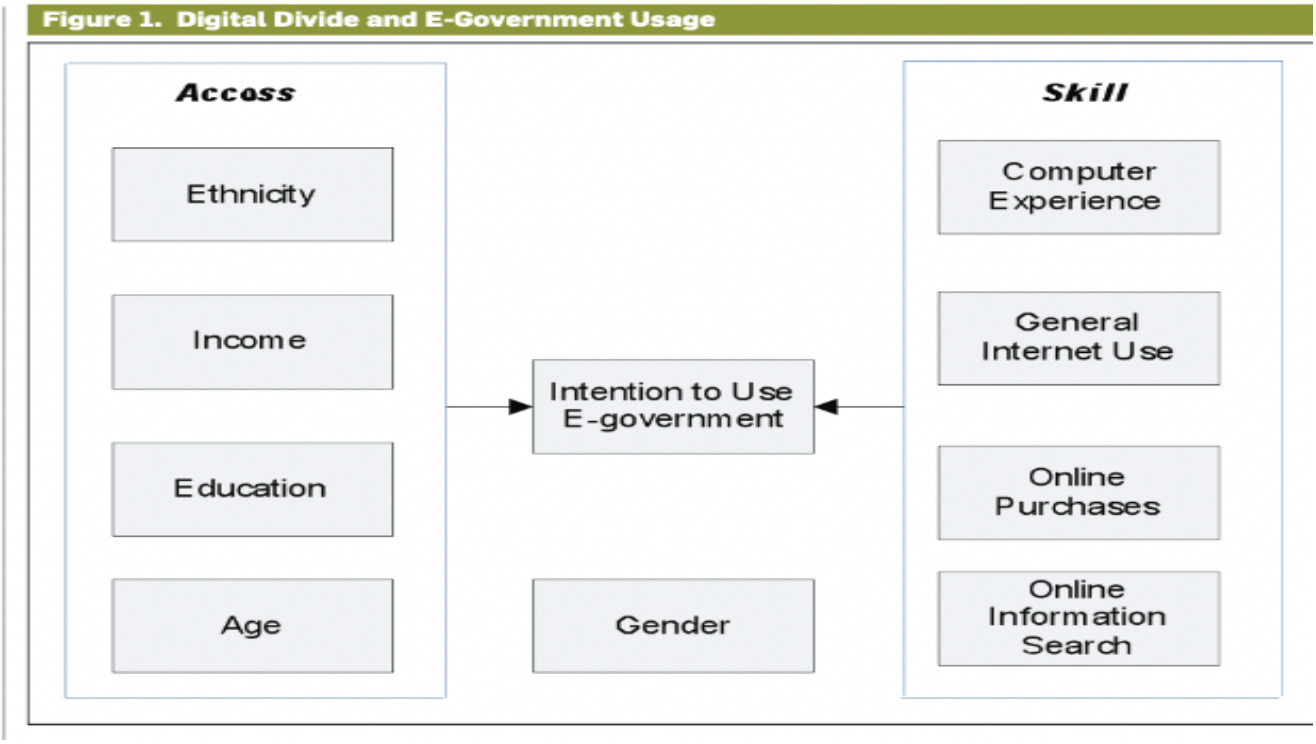

Source: Belanger & Carter (2009)

More recent conceptualizations according to Van Deursen & Van Dijk (2011) have shown that one of the elements that appear to be most essential is the differential possession of digital skills, whereas earlier studies on the digital divide mostly focused on a binary classification of physical access. Similarly, Tayo (2015) identified that the high cost of computer equipment, lack of ICT skills, and lack of familiarity with accessible search engines are only a few of the causes of the digital divide. Studies by scholars like Belanger and Carter (2008) and Tolbert and Mossberger (2006) have discovered a correlation between higher levels of e-government service utilization and better levels of trust in the government. To a large extent, these views are sacrosanct because the level of trust between the government and its citizens can impact public support for e-government. The takeaway from this section is that the digital gap exists between men and women, developed and developing countries, urban and rural populations, the older and younger generations, educated individuals and less educated, etc.

E-governance: There are several definitions of e-governance used in different studies, each of which varies depending on the needs of the research investigations (Adam and Chima, 2023). However, a common and popular understanding of e-governance suggests that it is "the use of information technology, particularly telecommunications, to enable and increase the efficiency with which government services and information are given to residents, employees, businesses and government agencies (Carter and Belanger, 2004)." Using information and communication technologies (ICTs) to support public services, government administration, democratic processes, and interactions among citizens, civil society, the commercial sector and the state is e-governance (Dawes, 2008). From the dimension of effective delivery of government services with transparency,

dependability and accountability, Malodia et al. (2021) describe e-governance as socially inclusive, hyper-integrated ICT platforms. A recurring theme in the descriptions above is that e-government entails the automation or computerization of conventional paper-based procedures, resulting in new leadership styles, business practices, ways to collect and distribute information, and new ways to communicate with individuals and communities.

Supporters of e-governance often guarantee the benefits of better governance, such as higher service quality, reduced costs, increased political engagement, or more efficient policies and programmes (Gartner, 2000; Garson, 2004, Chima and Adam, 2023). Twizeyimana, & Andersson (2019) aver that e-governance has external and relational values. External value refers to how e-governance enables governments to be more transparent to residents and companies by disseminating and providing access to a broader range of information gathered and generated by the government. Relational refers to how e-governance adoption may enable fundamental changes in people's interactions with the state, with ramifications for the democratic process and government institutions. Others claim the promise of more efficient and democratic public administration has not been fulfilled by the ideal of e-governance (Jaeger et al., 2005, Garson, 2004). It is also expected that e-governance services would improve government services while also enhancing citizen engagement (Xiong, 2016). Furthermore, e-government services give the public access to government information and services 24 hours a day, seven days a week, and have the potential to fundamentally restructure government operations (Malodia et al, 2021). Thus, the curiosity for this study is to unveil digital divide factors destabilizing the uptake of e-government services in Nigeria. This becomes pertinent in view of the fact that previous research has demonstrated that the modalities of digital inequality are context-specific, and it is crucial to be explicit about the context while researching the digital divide (Barzilai-Nahon, 2006).

E-Service: The term "e-service" stands for "electronic service,". It refers to a service that is provided electronically (Scupola, Henten & Nicolajsen, 2009). E-service as a concept has recently grown in popularity. There is, however, little general agreement with regard to its definition. Suffice it to say that there is a lack of a comprehensive definition and comprehension of e-services, as well as the notion and paradigm around them. However, electronic service, abbreviated as e-service, can be seen as a broad word encompassing services delivered using information and communication technology. The term "e-service" has numerous applications and can be found in a variety of areas. These include, E-business (or e-commerce) and E-government are the two most common utilizations for e-services (or non-commerce) (Kvasnicova, 2016). Sharing his thought on the concept of e-service, Scupola (2009) views it as Internet-based programmes that respond to service demands by dynamically integrating dispersed, specialized resources to enable complex (often real-time) transactions. Rowley (2006) defines e-service as "actions, initiatives, or performances whose transmission is facilitated by information technology" (including the Web, information kiosks and mobile devices). The foregoing definition suggests that through technology, like a website, consumers interact or contact the organisation when using an e-service. The fact that e-services are delivered electronically is shared by all of these definitions. In the context of e-governance, e-services are regularly used to transmit information in order to get permits, payments, register taxes, and other intangible items (Lindgren,2013). de Ruyter et al (2001) shares their thought by defining e-service as "an interactive, content-centered, Internet-based customer service, driven by the customer and connected with appropriate organizational customer support procedures and technologies with the purpose of enhancing the customer-service provider relationship." From the foregoing, it could be concluded that the existing definitions are based on a single central concept: the internet or another electronic network. However, without mincing words, Wikipedia Foundation cited in Kvasnicova (2016) asserts that e-services are moving away from the Internet. Telephone, fax, personal digital assistant, text messaging, image messages, Bluetooth, tracking systems, radio-frequency identifiers, biometrics identifiers, electronic ID cards, e-mail, online chat, and a variety of additional "offline" e-services are also

examples. What is unique about e-service is that people can transact with governmental bodies via ICT and transactions can be finished at the user's convenience without any queues, heavy traffic or administrative hassles. Theoretical Framework: Diffusion of Innovations Theory by Rogers (2003), provides a strong theoretical foundation for this study. Rogers defines innovation as "an idea, behaviour or object seen as novel by an individual or other unit of adoption." For Rogers, diffusion is "the process by which an innovation is disseminated through certain channels among members of a social system over time." In other words, Diffusion theory examines how ideas, behaviour and objects are spread among groups of people. Diffusion theory was rigorously tested for the first time in the 1940s and has since expanded, with research focused on the acceptance of a wide range of innovations, from hybrid seed corn to new health practices to Internet services. The idea of innovation diffusion proposes a general adoption model with five groups of adopters based on how soon they begin to use the invention (Rogers, 1995). Adopters are classified into five groups: innovators, early adopters, early majority, late majority, and laggards (Rogers, 1971). These are explored in greater depth below. Innovators have an almost obsessional need to experiment with new ideas. Large financial resources as well as the capacity to comprehend and apply complicated technological knowledge are frequently required for innovation. Some may perceive the innovator as bold or reckless, but they value risk-taking for the inherent danger it conveys. The innovators are also willing to accept the occasional failure when new ideas do not work. Early adopters are more likely than innovators to be absorbed into the local social system. Locals are seen as early adopters as opposed to cosmopolitan innovators. Early adopters appear to wield the most power in most social systems. They offer advice and information on a topic of interest to other adopters. Early adopters will be sought out by change agents in order to accelerate the dissemination process. Early adopters are frequently well-liked by their coworkers, and they have a track record of successfully and discreetly implementing new ideas. The theory postulates that early adopters of any technological innovation share three traits in common: they are young, educated and wealthy. These traits match those of users of e-governance services (Dimitrova and Chen, 2006).

In a social structure, the early majority will accept new concepts before the average member. Despite being in constant communication with their colleagues, they are seldom seen in positions of leadership. Since they serve as a bridge between very early adopters and late adopters, the early majority adopters are crucial to the dissemination process. They take longer to make decisions on new ideas than innovators and early adopters do because they take more time to consider them. Early majority adopters follow in the adoption of technology with excitement, but hardly ever take the lead. The late majority is a pessimistic group that embraces novel concepts similar to the ordinary social system member. They are hesitant to absorb new ideas and will hold off until nearly all of their social structure has. The late majority will only adopt an idea if the system rules clearly support it. They need to feel a lot of peer pressure before embracing an invention, even if they are persuaded of its advantages. Their adoption could be the result of mounting financial constraints and escalating social pressure. The laggards are obsessed with the past. Consequently, they make their decisions from the perspective of previous generations. Individual laggards tend to talk to traditionalists more often than innovators. In fact, Laggards are interested in maintaining the status quo, thus, are unwilling to embrace new ideas. Each adopter group has distinct traits. Laggards are so confined as a result of their lack of opinion leadership that they distance themselves from the other adopter types. Ideas that are already regarded as archaic in comparison to more recent ones are typically accepted as innovations by laggards. The late majority are sceptical, but, the laggards are more sceptical.

Applicability of the Theory to this Paper

This theory applies to the study since it suggests that Nigerian e-service users can be divided into four groups: early adopters, early majority, late majority and laggards. The most educated, young, and affluent members of

society live in Nigeria's urban centres, such as Lagos, Abuja, Port Harcourt, Kano, etc., where the early adopters are primarily concentrated. E-service usage is also significantly impacted by phone density by urban dwellers. With these characteristics, people in the urban centres more readily adopt any technological advances than their counterpart in rural areas who possesses the opposite characteristics. This creates a digital divide in Nigeria across and among different geographical areas, the haves and have-nots, and youths and elderly populations. The theory is also applicable to this study because the majority of e-service users in Nigeria are in the late majority and laggard categories. Most e-service users are hesitant to adopt e-services because they are normally wary of new ideas and will always wait until the bulk of individuals in their social circle have used the technology. People in this category in Nigeria naturally have a phobia to adopt new technology, so they frequently rely on friends or peers to check their email or browse the internet for them. The same conditions apply to Nigerian citizens who are in the laggard group. Due to their inadequate ICT literacy, they show unwillingness and maintain the status quo.

A Search for Demand-Side Militating Factors

In recent times, some public services are delivered online in Nigeria. Typical of these according to Edet Ani et al (2007), most of the standard examination bodies or organizations, including JAMB, WAEC, NECO, etc., now conduct their educational operations online, and this trend has become more pronounced over the past two years. As a result, students can now register for these numerous assessments online at any time and from any location without having to make the perilous and expensive physical commute to school. Similarly, other Nigerian universities are already launching websites that let potential students converse online while looking for admissions and other important information. Despite this, Nigeria has significant digital gaps. This assertion has been substantiated by Adeleke (2021), when he posited that there are obvious clusters of high numbers for Internet usage in Lagos, Oyo, Ogun, Kaduna, Kano, and Abuja, indicating differences in Internet usage amongst the major areas of Nigeria. In contrast, Adeleke (2021), submitted that there were few Internet users in Ekiti, Ebonyi, and Bayelsa states. This is presented numerically below:

"In both the south and the north, particularly in Oyo (5,824,283), Ogun (6,628,217), and Lagos (15,707,534), and Kaduna (4,993,597), Kano (5,874,504), and the Federal Capital Territory (5,250,508), there are observable clusters of high figures for Internet usage. Additional examination of the map reveals that, while the south had the highest percentage of Internet users (62,279,747) nationwide, there were instances of low Internet user numbers in Ebonyi (938,295), Ekiti (1,103,884), and Bayelsa (856,374) (Adeleke, 2021:9).

This shows that the country's Internet usage was sharply divided along a number of economic and social lines, as well as between its urban and rural regions. The size of the market, employment, wealth, availability of energy, urbanization, gender (female), age (60 and older), and phone density all had a major impact on internet usage. However, an empirical study conducted by Edet Ani et al (2007) 'Bridging the digital divide in Nigeria: A study of internet use in Calabar Metropolis, Nigeria' reports that the two biggest barriers to internet use are a lack of financial resources and lack of ICT skills. For instance, the report submits that users of public services employ the assistance of operators of cyber cafes or any other intermediaries (such as friends or peers) to browse the internet or check their email. In a similar vein, Titilope (2018) opines that language and cultural limitations also provide a significant hurdle to reducing the digital divide among Nigeria's rural population due to a lack of locally generated content online. It is challenging for Nigerians because their first language is not English to access and use such information because the majority of content on the internet and other ICT tools is written in another language. As a result, it is difficult for people to use and apply the knowledge in their daily lives because it is not indigenous. In addition, Titilope (2018) submitted that rural people, especially, have misconceptions about how technology is used; they believe it is designed for the elitist group rather than for people like them who are uneducated, archaic, and uninitiated in its use. Eneh (2010) highlighted the disparity in Internet usage between men and women in

Enugu state, Nigeria. It was pointed out in her report that men use the Internet more regularly than women, according to the study. This was attributed to women's low literacy rates. In a similar vein, Anunobi and Mbagwu (2009) evaluated the gender gap in Internet usage in the Nigerian state of Imo and discovered that female use was nearly on par with male use. However, they emphasized that technological discrimination against women, historically enforced home pressure, and various cultural hurdles were the causes of their limited Internet usage.

Table1: Access to High-Quality Internet Service by Geopolitical Zones in Nigeria

Geopolitical Zones	Internet Users	Year	Quarter
Eastern Region	13.7 million	2021	Fourth Quarter
Southwest	41.7 million	2021	Fourth Quarter
North Central	26.6 million	2021	Fourth Quarter
North West	25.4 million	2021	Fourth Quarter
South-South	20.8 million	2021	Fourth Quarter
North East	13.8 million	2021	Fourth Quarter

Source: Author's Construct, 2022

After the COVID-19 pandemic, when educational systems switched to new learning techniques utilizing the internet, children in rural and underdeveloped areas of Nigeria were mostly excluded from this digital change (Amorighoye, 2020). In this regard, Obiakor & Adeniran (2020) reported that the bulk of people in Nigeria who have access to the internet during the COVID-19 pandemic come from urban homes with higher socioeconomic status and the means to pay for private school tuition, providing their kids with an educational advantage over those in public schools. Adaramola (2022) attributed the low uptake of e-service in Nigeria to inadequate broadband infrastructure. Due to insufficient infrastructure, nearly 30 million Nigerians are affected who are not online. According to the NCC report, Nigeria's fiber optic broadband networks only account for less than 25% of all the country's installed fiber cables, even while broadband penetration is still only at 45% (Adaramola, 2022). Similarly, an in-depth study conducted by the Alliance for Affordable Internet (A4AI) indicates that only 12.1% of Nigeria's population now has access to high-quality Internet services (Meaningful Connectivity) (Adepetun, 2022). According to A4AI reported in Adepetun (2022), there is an 81% connectivity gap in Nigeria, with only 6.6% of the rural population and 16.4% of the urban population having adequate Internet service. In terms of Internet access using the aforementioned report, rural communities lag behind their metropolitan counterparts. This shows that people in urban regions are twice as likely as those in rural areas to be connected to the Internet, and the urban-rural Internet use difference will continue to widen. This situation is partly linked to the fact that just 68.7% of Nigerians own a computer (Adepetun, 2022). The magnitude of digital disparity in Nigeria is depicted in table 1.

According to the above table, South Eastern Nigeria has the fewest internet users in Nigeria in the fourth quarter of 2021. In the quarter under review, the South West region had the most internet users, followed by the North Central, North West, and South-South. The unstable North East comes in second to the South Eastern region.

Additionally, there is a north-south difference within the nation, with southern regions (including large cities like Lagos) faring better than their northern counterparts in terms of household mobile phone coverage (Mba, 2022). Lack of infrastructure, poor broadband access, population size and inadequate finance were demand-side factors found to be responsible for the low uptake of e-service users.

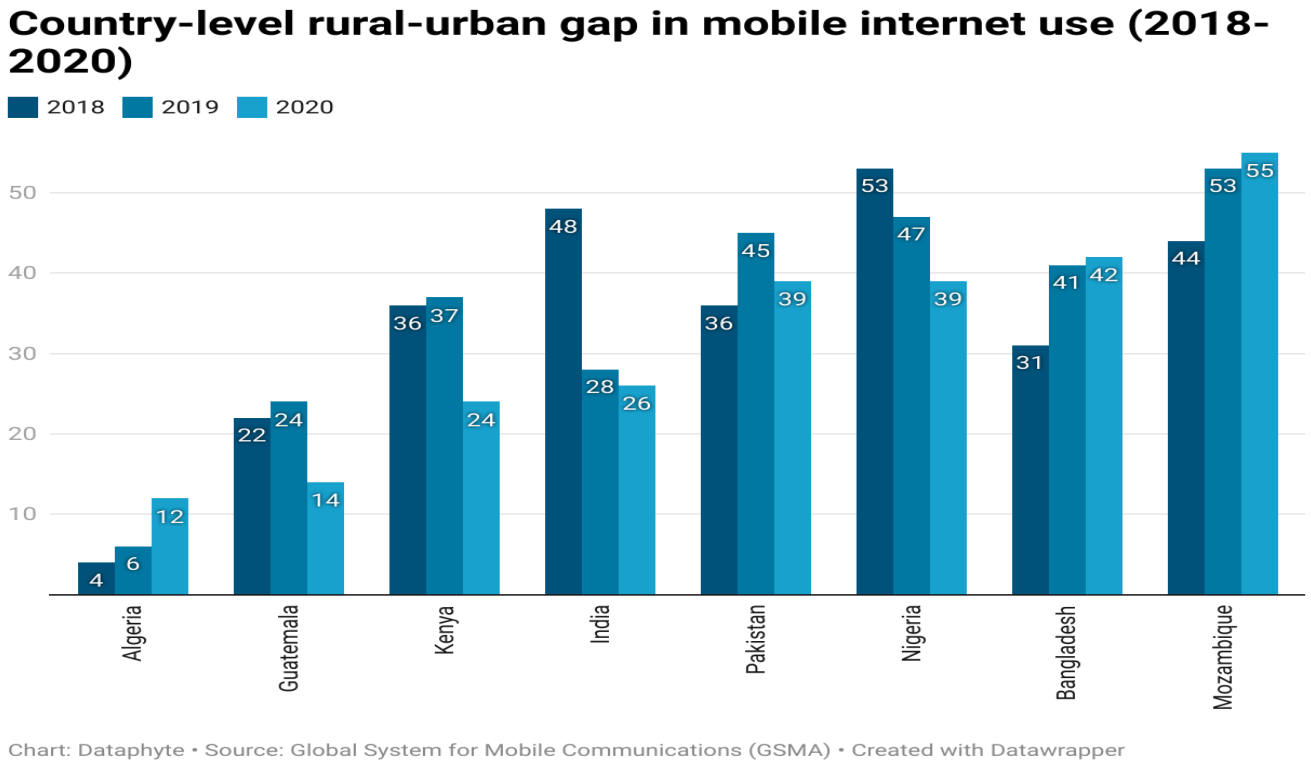

Figure 2: Country-level rural urban gap in mobile internet use (2018-2020)

Chart: ***Global System for Mobile Communications (GSMA). Created with Data wrapper***

The graph above further shows that there is still a sizable rural-urban difference even though more people are accessing mobile internet in rural areas. A Global System for Mobile Communications (GSMA) survey reported in Mba (2022), found that across rural and urban Nigeria, the proportion of people using mobile internet dropped from 53% in 2018 to 39% in 2020 (see the graph below). However, compared to 40% in urban areas, 61% of Nigerians live in rural areas without access to the internet, (Mba, 2022). The graph demonstrates further that of the low and middle-income countries (LMICs) examined, Nigeria has one of the largest rural-urban disparities in mobile internet use. Countries like Kenya and India as shown in the graph below have a smaller rural-urban split than Nigeria does. In summary, the finding from the study shows that the digital gap in Nigeria is caused by a lack of financial resources and ICT skills, a language barrier to accessing online information, cultural barriers, and a low literacy rate. These have been exhaustively addressed in the paper.

Methodology

This study aimed to provide a comprehensive overview of the existing literature on demand-side factors that account for the digital divide and explain the poor use of public e-services in Nigeria. A review of the literature was conducted to analyse and synthesize the key findings, methodologies, and theoretical frameworks used in previous studies. The review of the literature approach was chosen because it allows for a systematic and rigorous analysis of the available literature on demand-side factors that accounts for the digital divide and explain the poor use of public e-services in Nigeria. The search terms included "digital divide," "public e-service," "uptake," "factors," "barriers," "challenges," "access," "use," "internet," and "technology." The search was limited to studies published between 2010 and 2022 in English. A total of 22 studies were selected for inclusion in the review after the inclusion and exclusion criteria were applied to select the most relevant and high-quality studies for review. The key findings, methodologies, and theoretical frameworks used in previous studies were identified and analysed for patterns, similarities, and differences. The results of the review of literature were synthesized and presented in a narrative format, which according to Snyder (2019) should include a critical evaluation of the strengths and limitations of the previous studies, as well as the implications for future research were all considered. The validity and reliability of the literature review were ensured by following a rigorous and transparent data collection and analysis process. The inclusion and exclusion criteria were applied consistently and objectively to minimize bias in line with the view of (Salkind, 2010), and the search strategy was documented and reported in detail. Multiple reviewers conducted the data reviews to ensure inter-rater reliability, and any disagreements were resolved through discussion and consensus. This review of the literature did not involve human subjects, and therefore, ethical approval was not required. However, all studies included in the review were cited and referenced appropriately to acknowledge the original authors and sources of the data.

Results and Discussions

The systematic review identified several factors that militate against the uptake of public e-services due to the digital divide. These factors can be categorized into three main groups: individual, social, and infrastructure-related factors.

Individual Factors: Individual factors include digital literacy, age, income, education, and computer and internet access (Haleem et al, 2022). The studies showed that individuals with low digital literacy are less likely to use public e-services. Also, older individuals, those with lower income and education, and those with limited computer and internet access are less likely to use public e-services. This supports the finding by Hill et al. (2015) that older individuals lack abilities to participate in increasingly online activities, creating a digital gap in society. Also, the findings of a study involving a sample of 65 to 70-year-old people demonstrate that higher education is linked to greater ICT use (Augner, 2022). Younger populations use available electronic government services more regularly, according to other studies, such as those by Goldfinch et al. (2009) and Zheng & Schachter (2017). Similarly, the finding is consistent with the work of Mubarak et al (2020) which claimed that income and education are factors in ICT diffusion and that poverty is a major factor in the global digital gap.

Social Factors: Social factors include trust, culture, language, and social support. Studies showed that a lack of trust in public institutions and services, cultural and linguistic barriers, and limited social support can hinder the uptake of public e-services (Kelly et al, 2023). Utilizing panel data collected from 27 European nations for the years 2010 to 2018, Pérez-Morote et al (2020) reveal that the use of e-government services by citizens is influenced by their level of trust in their governments and the digital gap related to their level of income and education. In the

same vein, studies by authors such as Tolbert and Mossberger (2006) and Belanger and Carter (2008), state that there is a correlation between increased use of e-government services and higher levels of public trust.

Infrastructure-Related Factors: these include the availability, affordability, and quality of digital infrastructure (Oloyede et al, 2023). Studies showed that poor digital infrastructure, limited access to broadband, and the cost of digital infrastructure can impact the uptake of public e-services. In a survey employing the double-bounded dichotomous choice model to evaluate people's WTP, with two study hypotheses tested and verified through regression analysis, Chen et al (2023) discovered that consumers in rural areas are substantially less ready to pay for broadband than those in metropolitan areas. Similarly, Peter (2021) found that broadband access is constrained by socioeconomic considerations, contributing to the digital divide – the gap between those who have ready access to computers and the internet and those who do not.

Conclusion

Having examined the archival materials on the digital divide factors militating the uptake of public e-service in Nigeria, the paper concludes that few studies have explored demand-side factors. Incidentally, these factors aggravate digital divide in Nigeria and by extension limit the uptake of public e-service. The study, therefore, suggests that the Nigerian government should bridge the digital divide in order to achieve more equitable and sustainable socioeconomic development throughout Nigeria's social strata. This is germane on the premise that a country's potential to attract investment, grow existing industries and promote job creation is significantly influenced by its people's abilities, which adoption of digital economy has proven in other climes.

Consequently, the ever-widening digital divide between the North and South, rural and urban areas, organizations and within organizations must be bridged. In doing so, the study proposes the need for governments to invest in improving digital infrastructure, promoting digital literacy, and providing social support to individuals who may face barriers to using public e-services. Additionally, governments should work to build trust and confidence in public e-services and address cultural and linguistic barriers to their uptake.

The review further adds to the current body of literature, as it provides researchers an avenue to identify the key factors that have been found to influence e-service adoption, most especially from an emerging economy context, which is not so common in literature. Further, it highlights fundamental areas where further research is needed in developing and understanding the digital divide and public e-service. This can help to inform the design and implementation of e-services in ways that are more responsive to the needs and preferences of diverse user groups and can help to promote greater uptake of these services among populations that may currently be underserved or excluded.

In addition, by exploring the complex interplay of factors that affect e-service adoption, researchers can contribute to a more nuanced understanding of the digital divide and its impacts. This can help to challenge simplistic assumptions about the causes and effects of the digital divide and can lead to more effective policies and interventions for reducing inequalities in access to digital technologies and services. As a policy contribution, this study provides policymakers and service providers better understand the barriers and facilitators to e-service adoption, and to develop strategies for promoting greater equity and access to these services. Overall, the originality and contribution to the knowledge of research on the factors affecting the uptake of public e-services in the context of the digital divide lies in its potential to inform policy and practice in ways that promote greater equity and access for all citizens, and in its ability to deepen our understanding of the complex social and economic factors that shape the digital divide.

One possible direction for future research is to investigate the role of digital literacy and skills in the uptake of public e-services. Also, the emphasis could be to investigate the role of trust and confidence in the uptake of public

e-services. This could involve exploring how trust and confidence in e-services are formed, how they are affected by factors such as privacy and security concerns, and how they can be strengthened. Future research could focus on identifying barriers to accessibility and usability and exploring ways to improve the design and accessibility of e-services for users with different needs and abilities. Future research could explore how these factors interact with digital divide factors to affect the use of e-services, and identify strategies for addressing the socio-economic factors that may be hindering the uptake of e-services. Finally, future research could investigate how cultural and social factors influence the adoption and use of e-services, and identify ways to address these factors in order to promote greater uptake of e-services among different groups of users.
The major limitation of this study is that it did not employ quantitative methods to analyse data.

Declaration

Acknowledgment: The authors would like to extend their gratitude to all participants for their invaluable cooperation in facilitating this study.

Funding: None

Conflict of interest: The authors assert that there are no conflicts of interest pertaining to the research, authorship, and publication of this paper.

Authors contribution: Dr. Paul Chima was responsible for document searching, outline creation, draft article composition, and final article completion. The text underwent a quality review and was subsequently reviewed and corrected by Chima Paul and Prof. Ekhator and Dr. Chima Paul also carried out document searches and performed various data-related tasks, such as data collection, cleaning, entry, and analysis. All authors approved the final version of the article to be published.

Data availability: From the author

Authors' Biographies: Dr. Chima Paul is a Senior Lecturer in the Department of Public Administration at the University of Abuja, Nigeria. Ekhator Victor Eghe is a Professor in the Department of Public Administration at the University of Abuja, Nigeria.

Reference

Abu-Shanab, E. (2012). The Digital Divide and Its Influence on Public Education Diffusion: International Journal of Technology Diffusion, 3(4), 36–47. https://doi.org/10.4018/jtd.2012100104.

Ada Scupola & Anders Henten & Hanne Westh Nicolajsen, 2009. "E-Services: Characteristics, Scope and Conceptual Strengths," International Journal of E-Services and Mobile Applications (IJESMA), IGI Global, vol. 1(3), pages 1-16.

Adams, S. O., & Chima, P. (2023). E-government development indices and the attainment of United Nations sustainable development goals in Africa: A cross-sectional data analysis. European Journal of Sustainable Development Research, 7(4), em0234. https://doi.org/10.29333/ejosdr/13576.

Adaramola (2022).Why 30m Nigerians Are Still Without Internet Access. Available@ https://dailytrust.com/why-30m-nigerians-are-still-without-internet-access/.

Adeleke, R. (2021). Digital divide in Nigeria: The role of regional differentials. African Journal of Science, Technology, Innovation and Development, 13(3), 333–346. https://doi.org/10.1080/20421338.2020.1748335.

Adepetun, A. (2022). '81 % of Nigerians lack meaningful internet connectivity'. The Guradian. https://guardian.ng/business-services/81-of-nigerians-lack-meaningful-internet-connectivity/.

Afzal, A., Khan, S., Daud, S., Ahmad, Z., & Butt, A. (2023). Addressing the Digital Divide: Access and Use of Technology in Education. Journal of Social Sciences Review, 3(2), 883–895. https://doi.org/10.54183/jssr.v3i2.326.

Amorighoye, T. A. (2020). The coronavirus has exposed the education divide in Nigeria. The World Economic Forum COVID Action Platform. Available@https://www. weforum.org/agenda/2020/06/education-nigeria-covid19-digital-divide.

Anunobi, C. V., and F. C. Mbagwu. 2009a. "Determinants of Internet Use in Imo State, Nigeria." Educational Research and Review 4 (9): 436–442.

Augner, C. (2022). Digital divide in elderly: Self-rated computer skills are associated with higher education, better cognitive abilities and increased mental health. The European Journal of Psychiatry, 36(3), 176–181. https://doi.org/10.1016/j.ejpsy.2022.03.003.

Bélanger, F., & Carter, L. (2008). Trust and risk in e-government adoption. The Journal of Strategic Information Systems, 17(2), 165–176. https://doi.org/10.1016/j.jsis.2007.12.002.

Bélanger, F., & Carter, L. (2009). The impact of the digital divide on e-government use. Communications of the ACM, 52(4), 132–135. https://doi.org/10.1145/1498765.1498801.

Carter, L. and Belanger, F. (2004). The Influence of Perceived Characteristics of Innovating on E-Government Adoption. Electronic Journal of E-Government, 2, 11-20.

Chen, S.-L., Jen Chen, C., & Lee, Y.-H. (2023). The correlation between broadband prices and the digital divide: A survey of Taiwan's north coast. Telematics and Informatics, 102033. https://doi.org/10.1016/j.tele.2023.102033.

Chima, P. (2022). Transiting from Manual Voting to Electronic Voting System for Enduring Democratic Governance in Nigeria: The Imperative for Digital Remedy. Journal of Technology Innovations and Energy, 1(1), 9–18. https://doi.org/10.56556/jtie.v1i1.131.

Chima, P., & Adams, S. O. (2023). The effect of e-government development indices (EGDI) on corruption perception index in sub-Sahara Africa: A panel data analysis. African Journal of Science, Technology, Innovation and Development, 1–9. https://doi.org/10.1080/20421338.2023.2247904.

Dar, S. A. & Dr Naseer Ahmad. (2022). Mobile Technology's Role in Meeting Sustainable Development Goals. Journal of Technology Innovations and Energy, 1(2), 8–15. https://doi.org/10.56556/jtie.v1i2.180.

Das, A., Singh, H., & Joseph, D. (2017). A longitudinal study of e-government maturity. Information & Management, 54(4), 415–426. https://doi.org/10.1016/j.im.2016.09.006.

Dawes, S. S. (2008). The Evolution and Continuing Challenges of E-Governance. Public Administration Review, 68, S86–S102. https://doi.org/10.1111/j.1540-6210.2008.00981.x.

de Ruyter, K., Wetzels, M., & Kleijnen, M. (2001). Customer adoption of e-service: An experimental study. International Journal of Service Industry Management, 12(2), 184–207. https://doi.org/10.1108/09564230110387542.

Dimitrova, D. V., & Chen, Y.-C. (2006). Profiling the Adopters of E-Government Information and Services: The Influence of Psychological Characteristics, Civic Mindedness, and Information Channels. Social Science Computer Review, 24(2), 172–188. https://doi.org/10.1177/0894439305281517.

Edet Ani, O., Uchendu, C., & Atseye, E. U. (2007). Bridging the digital divide in Nigeria: A study of internet use in Calabar Metropolis, Nigeria. Library Management, 28(6/7), 355–365. https://doi.org/10.1108/01435120710774495.

Eneh, O. C. (2010). Gender Digital Divide: Comparative Assessment of the Information Communications Technologies and Literacy Levels of Students in Nigeria. Information Technology Journal, 9(8), 1739–1746. https://doi.org/10.3923/itj.2010.1739.1746.

Fang, Z. (2002) E-Government in Digital Era: Concept, Practice, and Development. International Journal of the Computer, the Internet and Management, 10, 1-22.

Garson, G. D. (2004). The Promise of Digital Government: In A. Pavlichev & G. D. Garson (Eds.), Digital Government (pp. 2–15). IGI Global. https://doi.org/10.4018/978-1-59140-122-3.ch00.

Glyptis, L., Christofi, M., Vrontis, D., Giudice, M. D., Dimitriou, S., & Michael, P. (2020). E-Government implementation challenges in small countries: The project manager's perspective. Technological Forecasting and Social Change, 152, 119880. https://doi.org/10.1016/j.techfore.2019.119880.

Goldfinch, S., Gauld, R., & Herbison, P. (2009). The Participation Divide? Political Participation, Trust in Government, and E-government in Australia and New Zealand. Australian Journal of Public Administration, 68(3), 333–350. https://doi.org/10.1111/j.1467-8500.2009.00643.x.

Haleem, A., Javaid, M., Qadri, M. A., & Suman, R. (2022). Understanding the role of digital technologies in education: A review. Sustainable Operations and Computers, 3, 275–285. https://doi.org/10.1016/j.susoc.2022.05.004.

Helbig, N., Ramón Gil-García, J., & Ferro, E. (2009). Understanding the complexity of electronic government: Implications from the digital divide literature. Government Information Quarterly, 26(1), 89–97. https://doi.org/10.1016/j.giq.2008.05.004.

Hill, R., Betts, L. R., & Gardner, S. E. (2015). Older adults' experiences and perceptions of digital technology: (Dis)empowerment, wellbeing, and inclusion. Computers in Human Behavior, 48, 415–423. https://doi.org/10.1016/j.chb.2015.01.062.

Hoffman, D. L., Novak, T. P., & Schlosser, A. (2006). The Evolution of the Digital Divide: How Gaps in Internet Access May Impact Electronic Commerce. Journal of Computer-Mediated Communication, 5(3), 0–0. https://doi.org/10.1111/j.1083-6101.2000.tb00341.x.

Kelly, S., Kaye, S.-A., & Oviedo-Trespalacios, O. (2023). What factors contribute to the acceptance of artificial intelligence? A systematic review. Telematics and Informatics, 77, 101925. https://doi.org/10.1016/j.tele.2022.101925.

Kvasnicova, T., Kremenova, I., & Fabus, J. (2016). From an Analysis of e-services Definitions and Classifications to the Proposal of New e-service Classification. Procedia Economics and Finance, 39, 192–196. https://doi.org/10.1016/S2212-5671(16)30282-9.

Lindgren, I., & Jansson, G. (2013). Electronic services in the public sector: A conceptual framework. Government Information Quarterly, 30(2), 163–172. https://doi.org/10.1016/j.giq.2012.10.005.

Malodia, S., Dhir, A., Mishra, M., & Bhatti, Z. A. (2021). Future of e-Government: An integrated conceptual framework. Technological Forecasting and Social Change, 173, 121102. https://doi.org/10.1016/j.techfore.2021.121102.

Mba, C (2022). 61% Unconnected Rural Dwellers & Other Key Figures Nigeria Must Rewrite Towards Becoming an All-Inclusive Digital Economy.Available@ https://www.dataphyte.com/latest-reports/economy/61-unconnected-rural-dwellers-other-key-figures-nigeria-must-rewrite-towards-becoming-an-all-inclusive-digital-economy/.

Mossberger, K., Tolbert, C. J., & Stansbury, M. (2003). Virtual inequality: Beyond the digital divide. Georgetown University Press.

Mubarak, F., Suomi, R., & Kantola, S.-P. (2020). Confirming the links between socio-economic variables and digitalization worldwide: The unsettled debate on digital divide. Journal of Information, Communication and Ethics in Society, 18(3), 415–430. https://doi.org/10.1108/JICES-02-2019-0021.

Norris, P. (2003). Digital Divide: Civic Engagement, Information Poverty and the Internet World-Wide. Info - The Journal of Policy, Regulation and Strategy for Telecommunications, 5(1), 77–78. https://doi.org/10.1108/146366903322008287.

Obiakor, T., & Adeniran, A. (2020). COVID-19: Risk-control measures threaten to deepen Nigeria's education crisis. Centre for the Study of Economies of Africa (CSEA). http://cseaafrica.org/covid-19-risk-control-measures-threatens-to-deepen-nigerias- education-crisis/.

Oloyede, A. A., Faruk, N., Noma, N., Tebepah, E., & Nwaulune, A. K. (2023). Measuring the impact of the digital economy in developing countries: A systematic review and meta- analysis. Heliyon, 9(7), e17654. https://doi.org/10.1016/j.heliyon.2023.e17654.

Palvia J.S.C. and Sharma S.S. (2007). "E-Government and E-Governance: Definitions/Domain Framework and Status around the World", International Conference on E-governance, 5th (ICEG).

Pérez-Morote, R., Pontones-Rosa, C., & Núñez-Chicharro, M. (2020). The effects of e-government evaluation, trust and the digital divide in the levels of e-government use in European countries. Technological Forecasting and Social Change, 154, 119973. https://doi.org/10.1016/j.techfore.2020.119973.

Pérez-Morote, R., Pontones-Rosa, C., & Núñez-Chicharro, M. (2020). The effects of e-government evaluation, trust and the digital divide in the levels of e-government use in European countries. Technological Forecasting and Social Change, 154, 119973.doi:10.1016/j.techfore.2020.119973.

Reddick, C. G. (2005). Citizen interaction with e-government: From the streets to servers? Government Information Quarterly, 22(1), 38–57. https://doi.org/10.1016/j.giq.2004.10.003.

Rogers, E. M. (1983). Diffusion of innovations (3rd ed). Free Press ; Collier Macmillan.

Rogers, E. M. (1995). Diffusion of Innovations: Modifications of a Model for Telecommunications. In M.-W. Stoetzer & A. Mahler (Eds.), Die Diffusion von Innovationen in der Telekommunikation (pp. 25–38). Springer Berlin Heidelberg. https://doi.org/10.1007/978-3-642-79868-9_2.

Rogers, E. M. (2003). Diffusion of innovations (5th ed). Free Press.

Rogers, E.M. (2003). Diffusion of innovations (5th ed.). New York: Free Press.

Rowley, J. (2006). An analysis of the e-service literature: Towards a research agenda. Internet Research, 16(3), 339–359. https://doi.org/10.1108/10662240610673736.

Salkind, N. (2010). Encyclopedia of Research Design. SAGE Publications, Inc. https://doi.org/10.4135/9781412961288.

Scupola, A. (Ed.). (2009). Cases on managing e-services. Information Science Reference.

Snyder, H. (2019). Literature review as a research methodology: An overview and guidelines. Journal of Business Research, 104, 333–339. https://doi.org/10.1016/j.jbusres.2019.07.039.

Tayo, O., Thompson, R., & Thompson, E. (2015). Impact of the Digital Divide on Computer Use and Internet Access on the Poor in Nigeria. Journal of Education and Learning, 5(1), 1. https://doi.org/10.5539/jel.v5n1p1.

Thomas, J. C. (2003). The New Face of Government: Citizen-Initiated Contacts in the Era of E-Government. Journal of Public Administration Research and Theory, 13(1), 83–102. https://doi.org/10.1093/jpart/mug010.

Titilope, A. O. (2018). Digital Divide and its Socio-Psychological Implications on Rural Dwellers in Nigeria: International Journal of Innovation in the Digital Economy, 9(1), 26–34. https://doi.org/10.4018/IJIDE.2018010103.

Twizeyimana, J. D., & Andersson, A. (2019). The public value of E-Government – A literature review. Government Information Quarterly, 36(2), 167–178. https://doi.org/10.1016/j.giq.2019.01.00.

van Deursen, A., & van Dijk, J. (2011). Internet skills and the digital divide. New Media & Society, 13(6), 893–911. https://doi.org/10.1177/1461444810386774.

Várallyai, L., Herdon, M., & Botos, S. (2015). Statistical Analyses of Digital Divide Factors. Procedia Economics and Finance, 19, 364–372. https://doi.org/10.1016/S2212-5671(15)00037-4.

Zhao, F. (2011). Impact of national culture on e-government development: A global study. Internet Research, 21(3), 362–380. https://doi.org/10.1108/10662241111139354.

Zhao, Y., Pinto Llorente, A. M., & Sánchez Gómez, M. C. (2021). Digital competence in higher education research: A systematic literature review. Computers & Education, 168, 104212. https://doi.org/10.1016/j.compedu.2021.104212.

Zheng, Y., & Schachter, H. L. (2017). Explaining Citizens' E-Participation Use: The Role of Perceived Advantages. Public Organization Review, 17(3), 409–428. https://doi.org/10.1007/s11115-016-0346-2.

Journal of Technology Innovations and Energy
https://doi.org/10.56556/jtie.v2i4.680
ISSN: 2957-8809

RESEARCH ARTICLE

Investigation of Gas Turbine Blade Materials for Efficient Energy System

Irfan Ullah[1*], Najma Bashir[2]

[1]CECOS University, Peshawar Pakistan
[2]University of Engineering and Technology, Lahore, Pakistan

Corresponding Author: Irfan Ullah: irfanullahid@gmail.com:
Received: 28 October, 2023, Accepted: 24 November, 2023, Published: 29 November, 2023

Abstract
The present study aims to determine the best and most economical material for a gas turbine blade, which operates under high-temperature conditions and experiences high static structural and thermal loads. To achieve this objective, three different types of material alloys, namely Titanium alloy Ti6AL4V, Magnesium alloy AZ80, and Aluminum alloy 7075-T6, were selected for comparison. A turbine blade model was designed using Solid Works software, and structural and thermal analyses were performed using ANYAS 15.0 under steady-state conditions. The structural analysis aimed to determine the stress, strain, and deformation results on turbine blades by applying high pressure, while the thermal analysis aimed to determine the temperature distribution influences and heat flux generation by applying high temperatures. Based on the results obtained from both analyses of the three different materials, Titanium alloy Ti6AL4V is the best and most economical material. This material showed low stress, strain, and little deformation and the best material properties at high temperatures when compared to Magnesium alloy AZ80 and Aluminum alloy 7075-T6.

Keywords: Energy Generation; Gas Turbine; Structural analysis; Thermal analysis

Introduction

Gas turbines are a type of engine that is highly efficient and versatile, making them a popular choice in a variety of industries (Gallardo, Rodríguez et al. 2002, Swain, Mallick et al. 2020). They are commonly used in power plants to generate electricity, where they burn natural gas, diesel, or other fuels to produce high-pressure gas that is used to drive the turbine and generate power (Sivakumar and Mordike 1989, Salwan, Subbarao et al. 2021). Additionally, gas turbines, also known as jet engines, are used to propel airplanes by taking in air, compressing it, mixing it with fuel, igniting the mixture, and then expelling the combustion products to create thrust (Chowdhury, Mohsin et al. 2023, Courtis, Skamniotis et al. 2023). Their high power-to-weight ratio enables quick acceleration and maneuverability, making them a popular choice for naval ships and high-speed vessels (Liu, Han et al. 2023, Nourin and Amano 2023).

Irfan Ullah: irfanullahid@gmail.com: ORCID: 0009-0007-4109-3775
Najma Bashir: najmabashir20@gmail.com: ORCID: 0000-0003-3149-6902

Furthermore, gas turbines are used in mechanical drive applications in various industries, such as driving compressors, pumps, and generators (Soori, Asmael et al. 2023). They provide reliable and efficient power and are commonly used in the oil and gas sector for powering drilling equipment, gas compression, and as prime movers for natural gas pipeline compressors (Sharif, Noon et al. , Sharif, Tipu et al. , Ullah, Siddiqi et al. , Ullah and Sharif 2022).

A gas turbine is an internal combustion engine that generates power by turning a turbine with hot, fuel- and gas-burning air (Ujade and Bhambere 2014, Sharif, Siddiqi et al. 2020, Habib, Sharif et al. 2021). Basically, a gas turbine works identically as a steam turbine, except that it uses air instead of water. Fresh air is initially compressed and subjected to a high pressure, after which energy is supplied by fuels injected into the combustion chamber, resulting in a high temperature. As a result of the high pressure and temperature hitting the turbine, the shaft work output operates the electric generator (Jabbar, Rai et al. 2014, Htwe, Win et al. 2015). A gas turbine engine is a machine that generates mechanical power by using a gaseous working fluid. The steady flow of the operating fluid of a gas turbine is its primary advantage over reciprocating Otto and diesel engines. The Brayton cycle constitutes the foundation for gas turbine engine thermodynamics (Kumar and Pandey 2017, Habib, Sharif et al. 2022). Many applications use a gas turbine; an electro-mechanical device that continuously produces power (Sharif, Siddiqi et al. , Muhammad, Sharif et al. 2022). The primary indications of turbine blade failure, which depend on the aforementioned variables, are high stresses, high vibrations, and high thermal effects (Chintala and Gudimetla 2014). A material that is appropriate for use in gas turbine blades has to possess three mechanical properties: young modulus, shear strength, and fatigue resistance. The material must be suitably ductile and durable (Noon[1], Arif[1] et al. 2021, Shoukat, Noon et al. 2021). The gas turbine uses the energy of the air and gases that have been burned to produce electricity by expanding through the numerous rings of static and moving blades.

Literature Review

Extensive research in the field of aerospace engineering and materials science has been dedicated to the investigation of gas turbine blade materials. The optimization of gas turbine blade performance and durability has been the primary focus of numerous studies due to its crucial role as a component in aircraft engines and power generation systems. In the past, few researchers work on the gas turbine blade and its materials. According to evidence, up to 50% of the blades in some machines had cracks in the hollow center of the leading edge tips, and the failure was caused by a fissure that spread over the whole wall thickness of the blade (Tari 2000). The cooling of the turbines after they acquire a highest working temperature is one of the major difficulties in gas turbine design (HAN and Dutta 2001). High cycle fatigue of the compressor and turbine blades, which has become a typical failure mode for turbo machinery, is caused by high fluctuation loads imposed on the machinery by blade vibration resonance within the machinery's operating range (Chamis and Abumeri 2003). In order to boost the design capabilities for high-temperature turbines, researchers have carried out an experimental study program to provide a full, comprehensive knowledge and data base of turbine flow fields and their influence on heat transfer (Hacker 2000). It was investigated the consequences of rapid velocity on the composite blade. Results reveal that the blade has a significant damage tolerance at 0.01 chances of structural failure and comparatively low degradation intolerance at 0.999 probabilities (Lim and Menq 1994). Worked performed on the design and thermal analysis of gas turbine rotor blade on which cosmos software is used for the analysis of finite element method of gas turbine blade and design calculation is induced by MATLAB software by selecting three different materials titanium, nickel and copper. Total thermal heat flux of theoretical result for titanium alloy is 0.9927MW/m^2 ,copper is 2.6453 MW/m^2 and for nickle is 1.95559

MW/m^2 also simulation results of total thermal heat flux for titanium alloy is 1.1503 MW /m^2 ,copper is 3.0060 MW/m^2 and for nickle material is 2.1810 $MW/m^2$and for nickle material is 2.1810 MW/m^2.According to the results comparsion of theortical and simulation results titanium alloy material has the least heat flux as compared to copper and nickle alloy,So the titanium alloy is better than the other two alloy materials (Htwe, Win et al. 2015). Operating temperature of the turbine's inlet establishes the turbine's efficiency, but it also signals that material limitations and stressful conditions will prevent the turbine blades from withstanding such high temperatures (Jabbar, Rai et al. 2014). The surface coating of gas turbine blades against oxidation, corrosion, and erosion is paramount for their improved performance and longevity. To achieve this, several research investigations have been undertaken to develop cutting-edge coating technologies, such as thermal barrier coatings (TBCs) and environmental barrier coatings (EBCs). These advanced coatings aim to enhance the efficacy and resilience of the blades (Fathyunes and Mohtadi-Bonab 2023).

A lot of works were performed on gas turbine blade materials, but still there is lack of efficient material to enhance the efficiency of the gas power plant. In this study, various materials are considered and compared the structural and thermal analysis to investigate the more efficient and economical material that will increase the overall performance of the gas turbine. The objective of this project is to design a gas turbine blade and then develop the structural and thermal analysis on it to investigate and suggest the best and economical material.

Material and Methods

Materials

Titanium alloy TiAL4V

Titanium alloy Ti6AL4V is widely recognized for its exceptional strength-to-weight ratio, corrosion resistance, and biocompatibility, making it a popular material for various industries. The aerospace sector is the material of choice for aircraft components such as structural elements, engine parts, and landing gear components due to its lightweight and robust mechanical properties. In the medical field, Ti6AL4V is commonly employed for implants and prosthetics owing to its biocompatibility and resistance to bodily fluids. Furthermore, this alloy is used for lightweight and durable components in the automotive industry, resulting in improved fuel efficiency (Boshoman, Fatoba et al. 2023). Its corrosion resistance makes it suitable for marine structures and components in the marine sector. Additionally, Ti6AL4V finds use in chemical processing, power generation, and sports equipment, demonstrating its versatility in addressing demanding requirements across various industrial applications.

Magnesium alloy AZ80

Magnesium alloy AZ80 possesses a remarkable strength-to-weight ratio and is well-known for its lightweight nature, making it an attractive option for various industrial applications. Its low density and remarkable mechanical properties make it popular for manufacturing lightweight components in the automotive industry, contributing to reduced fuel consumption and lower emissions. Furthermore, AZ80's impressive corrosion resistance renders it an ideal option for aerospace applications, where it is utilized in producing aircraft structures and components. Additionally, the alloy's biocompatibility and ability to dissolve in the body make it suitable for medical implants and orthopedic devices (Naik, Sharma et al. 2023). The electronics industry also benefits from AZ80's properties, utilizing it for casings and components owing to its low density and good

mechanical properties. Finally, AZ80's exceptional thermal conductivity and heat dissipation properties enable it to be used in select applications in the electronics and telecommunications industries. In conclusion, the unique combination of mechanical strength and lightweight design makes magnesium alloy AZ80 highly desirable in various industrial sectors (Zhang, Yuan et al. 2023).

Aluminum alloy 7075-T6

Aluminum alloy 7075-T6, a material highly regarded for its exceptional mechanical properties and high strength-to-weight ratio, has found extensive usage in diverse industries. In the aerospace sector, the alloy is considered a vital component for aircraft structures, including fuselage components, wing structures, and critical structural elements, owing to its lightweight and exceptional strength (Habib, Sharif et al. 2021). Similarly, the automotive industry has also widely employed this alloy for producing high-performance vehicle components, such as suspension components, chassis parts, and wheels, which have enhanced fuel efficiency and overall performance. In addition, the alloy's durability and resilience make it a preferred choice for manufacturing precision equipment, including firearm components. Furthermore, the sporting goods industry has also taken advantage of its strength and lightweight characteristics by utilizing it for bicycle frames and other athletic equipment. The alloy's corrosion resistance further makes it useful in marine and naval constructions. In conclusion, the versatility of aluminum alloy 7075-T6 makes it a crucial material in various industrial applications, where the combination of strength, low density, and corrosion resistance is vital (Habib, Sharif et al. 2021).

Design and Cad Modelling of Blade

The gas turbine blade is designed in solid work software and then imported into ANSYS software 15.0 (Sharif, Siddiqi et al. , Tipu, Arif et al.). The design was based on previous study that enhances to increase the efficiency of the turbine blade. The 3D CAD model is shown in Figure 1 and design parameters are as shown in Table 1. Moreover, properties of gas turbine blade materials are as shown in Table 2.

Table-1: Design Parameters of Gas turbine Blade

Parameter	value	unit
Blade height, h	0.8	m
Chord width, c	0.322	m
Pitch,s	0.224	m
Blade inlet angle, β2	16.2	degree
Blade outlet angle, β3	52.7	degree

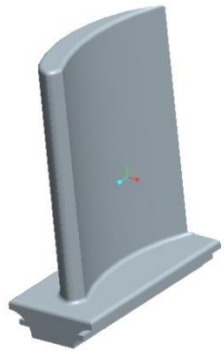

Figure 1: Turbine Blade Geometry

Table 2: Properties of materials alloys used in analysis (Hussain, Sharif et al. , Habib, Sharif et al. 2022, Sharif 2022, Aamir, Sharif et al. 2023, Sharif, Hussain et al. 2023, Sharif, Khan et al. 2023)

Material	Aluminum 7075-T6	Magnesium AZ80	Titanium Ti6AL4V
Yield Strength (Mpa)	510	380	880
Melting Temperature (℃)	640	672	1660
Density (Kg/mm³)	0.281	0.18	0.8
Thermal Conductivity (W/m-K)	130	24	6.7
Specific Heat (J/Kg-K)	870	990	520

Finite Element Analysis of Blade

In current work FEA software (ANSYS 15.0) is used for thermal and structural analysis of gas turbine blade, to investigate and suggest the best material for turbine blade to be newly manufactures. Structural and Thermal analysis is performed by ANSYS 15.0 software. The analysis is carried out under steady state condition i.e., Steady state static structural and Steady state Thermal stresses.

Structural Analysis

After generating 3D model in Solid work software, the geometry is then importing into ANSYS 15.0 software to generate mesh as shown in figure 2. A fixed support to the model from bottom and then apply 10^6 pa or 1 Mpa pressure to the front of blade. In data we take 1mpa pressure=10^6 pa so we convert all data to Mpa in experimental results.

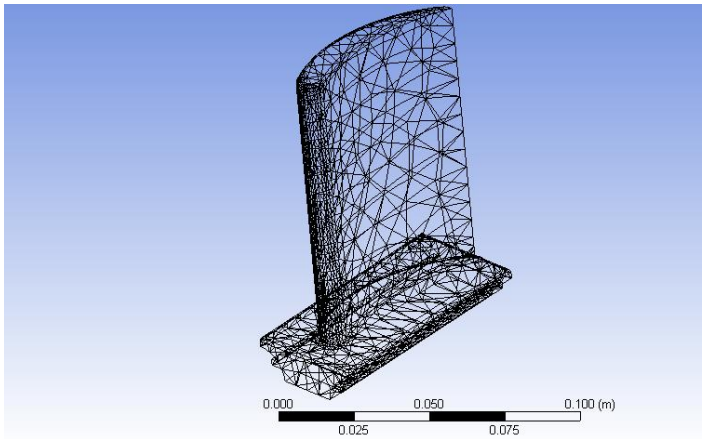

Figure 2: Mesh generation

Titanium Alloy (TiAl4V)

Maximum stress, Maximum Strain and Total Deformation

Maximum stress is seen in root of blade and minimum stress is at on top of blade tip as shown in figure 3. Maximum strain is seen in root of blade and minimum strain is at on top of blade tip as shown in figure 4. Maximum deformation is at top of blade tip and minimum deformation is at root of blade as shown in figure 5.

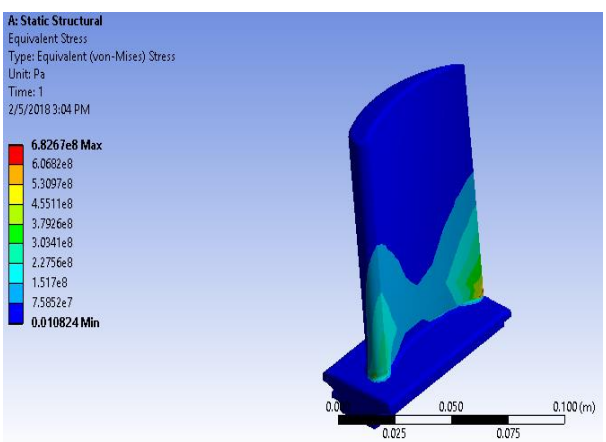

Figure 3: Equivalent Stress Distribution

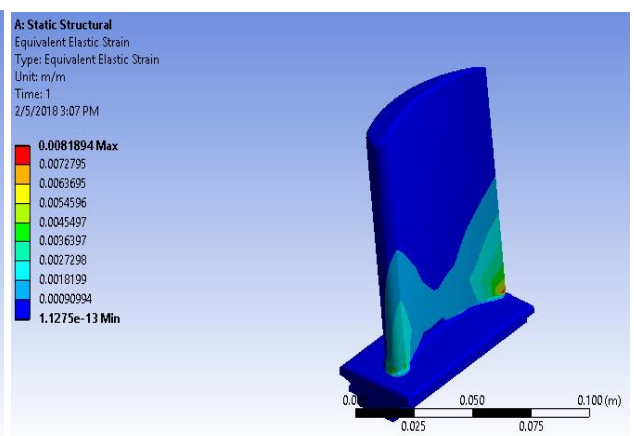

Figure 4: Equivalent Strain Distribution

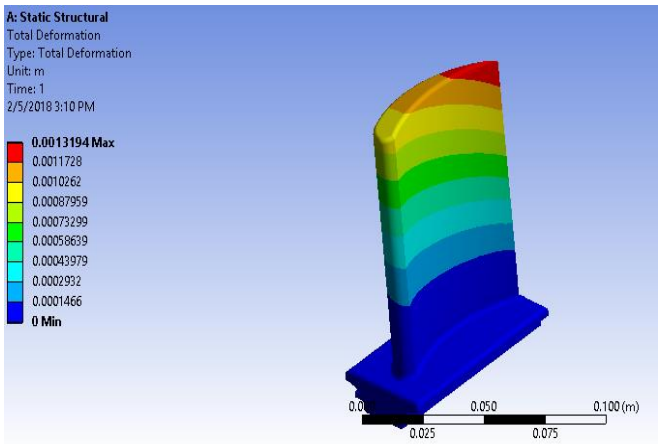

Figure 5: Equivalent Total Deformations

Magnesium Alloy (AZ80)

Maximum stress, Maximum strain and Total Deformation

Maximum stress is seen in root of blade and minimum stress is at on top of blade tip as shown in figure 6. Maximum strain is seen in root of blade and minimum strain is on top of blade tip as shown in figure 7. Maximum deformation is at top of blade tip and minimum deformation is at root of blade as shown in figure 8.

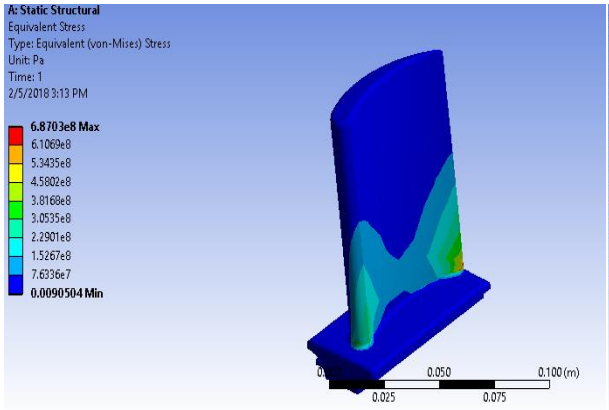

Figure 6: Equivalent Stress distribution

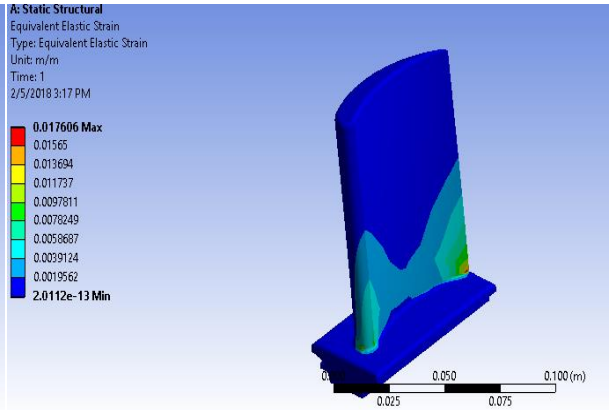

Figure 7: Equivalent Strain distributions

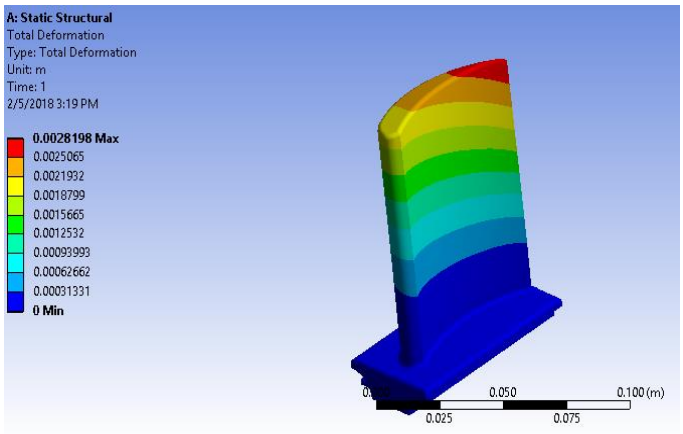

Figure 8: Equivalent Total Deformations

Aluminum Alloy (7075-T6)

Maximum stress is seen in root of blade and minimum stress is on top of blade tip as shown in figure 9. Maximum strain is seen in root of blade and minimum strain is on top of blade tip as shown in figure 10. Maximum deformation is at top of blade tip and minimum deformation is at root of blade as shown in figure 11.

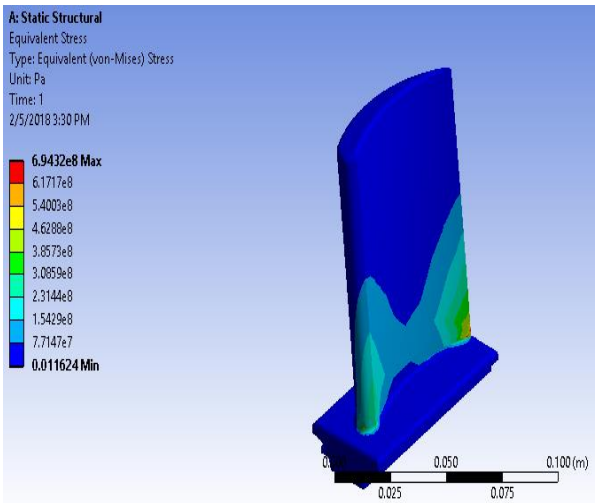

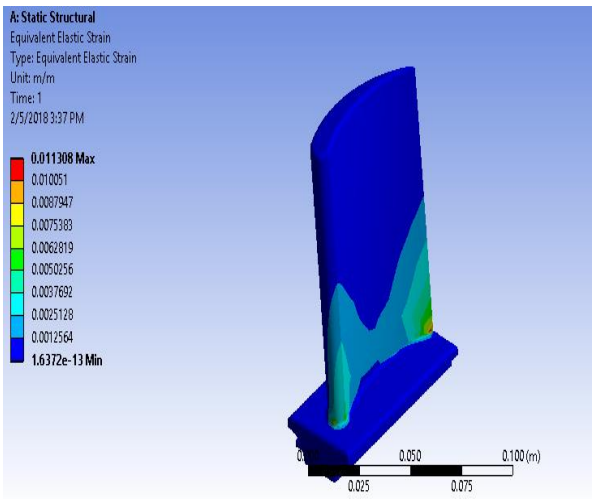

Figure 9: Equivalent Stress distribution Figure 10: Equivalent Stress distributions

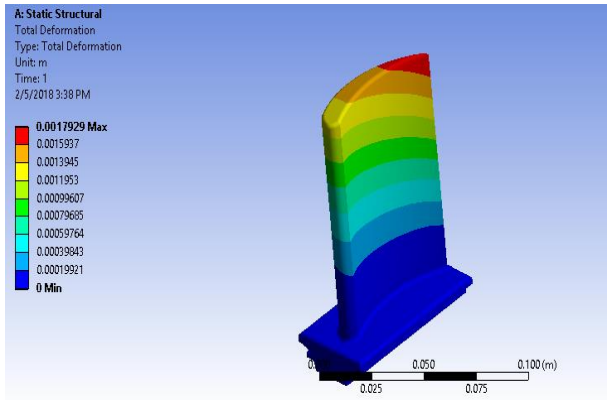

Figure 11: Equivalent Total Deformations

From above results Titanium Alloy have low stress, strain and low deformation as compared to other two material alloys on applying same 10^6 pa or 1 Mpa pressure.

Thermal Analysis of Gas Turbine Blade

In Steady state thermal analysis, we find temperature distribution and total thermal heat fluxes on different materials alloy.

Maximum Temperature, Total Thermal Heat Flux

Titanium Alloy (TiAl4V)

As per the observations, the maximum temperature is found at the trailing edge surface of the rotor blade while the minimum temperature is found at the leading edge surface and bottom flat. Additionally, figure 12 shows the graphical representation of the same. On the other hand, figure 13 represents that the maximum total thermal heat flux is observed at the trailing edge surface and the minimum total thermal heat flux can be seen at the leading edge surface of the turbine rotor blade.

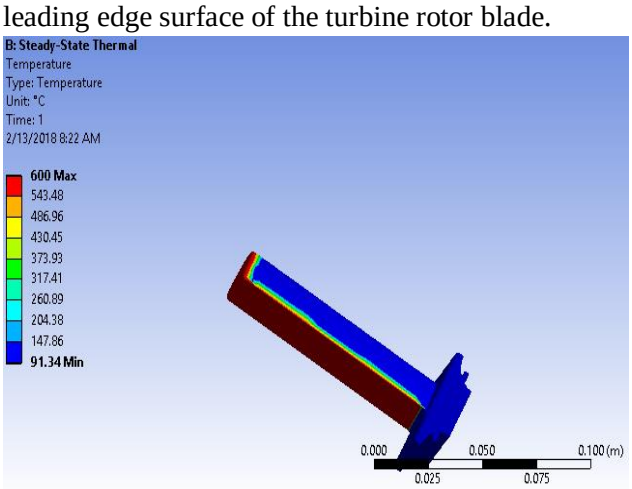

Figure 12: Total Temperature distribution

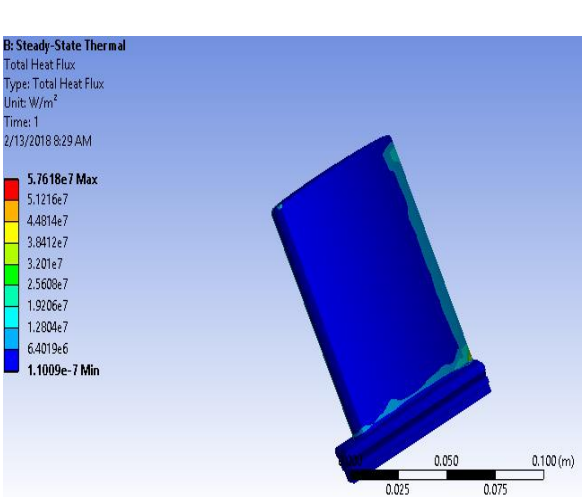

Figure 13: Total Heat Flux

Magnesium Alloy (AZ80)

The temperature distribution on the rotor blade is quite interesting. The highest temperature can be found on the trailing edge surface, whereas the lowest temperature is observed on the leading edge surface and the bottom flat of the rotor blade. This is clearly depicted in figure 14. Additionally, the maximum total thermal heat flux is noticed on the trailing edge surface, while the minimum total thermal heat flux is observed on the leading edge surface of the turbine rotor blade as shown in figure 15.

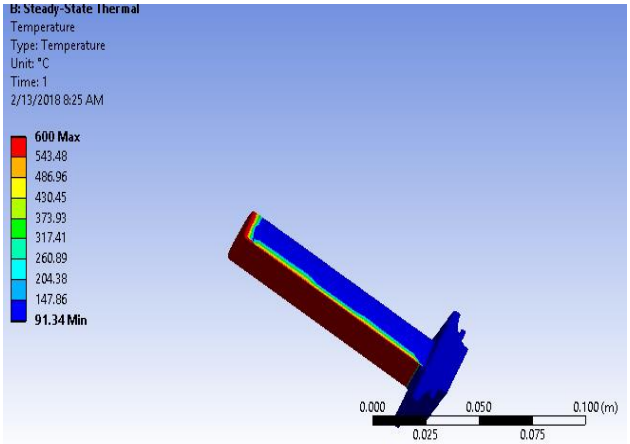

Figure 14: Total Temperature distribution

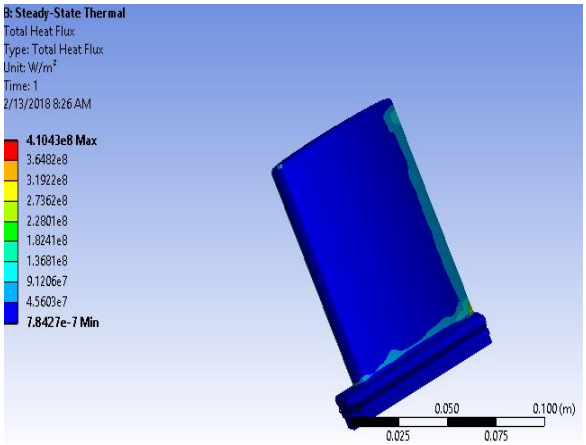

Figure 15: Total Heat Flux

Aluminum Alloy (7075-T6)

According to figure 16, the highest temperature is observed on the trailing edge surface of the rotor blade, while the lowest temperature is observed on the leading edge surface and bottom flat of the blade. Similarly, figure 17 shows that the maximum total thermal heat flux is observed on the trailing edge surface, while the minimum total thermal heat flux is seen on the leading edge surface of the turbine rotor blade.

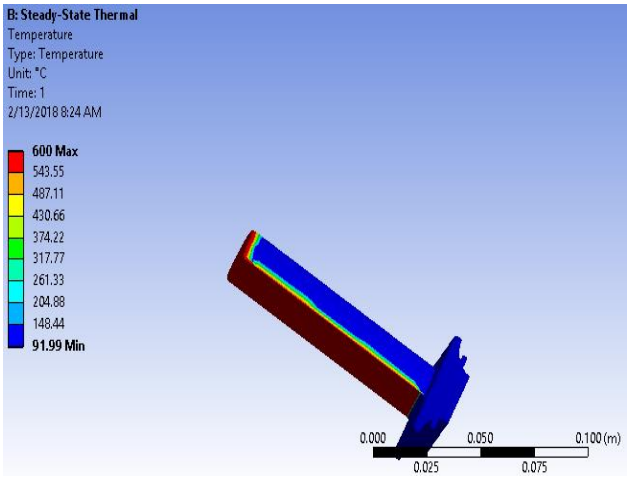

Figure 16: Total Temperature distribution

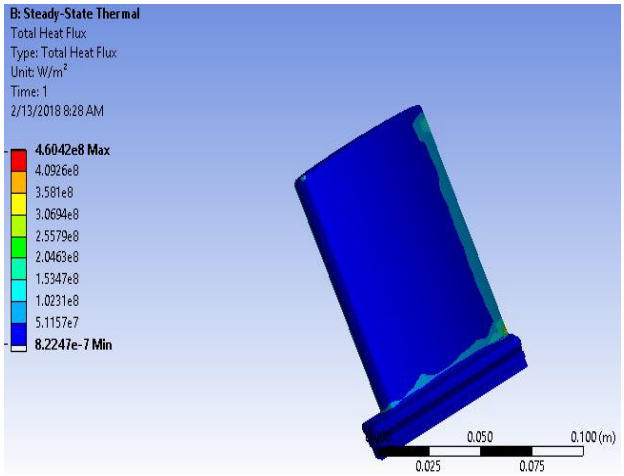

Figure 17: Total Heat Flux

The Experimental Results of Structural and Thermal Analysis of Gas Turbine Blade are as shown in table 3 and 4.

Table 3: Structural Analysis of Gas Turbine Blade

Materials	Stress (Mpa) (max)	Strain (m/m) (max)	Total Deformation (m) (max)
Titanium Alloy (TiAl4V)	682.67	0.00818994	0.0013194
Magnesium Alloy (AZ80)	687.03	0.017606	0.0028198
Aluminum Alloy (7075-T6)	694.32	0.011308	0.0017929

Table 4: Thermal Analysis of Gas Turbine Blade

Materials	Temp- Distribution (Max)	Temp- Distribution (Min	Total Heat Flux (w/m²)
Titanium Alloy (TiAl4V)	600	91.34	$5.7618e^{7}$
Magnesium Alloy (AZ80)	600	91.35	$4.1043e^{8}$
Aluminum Alloy (7075-T6)	600	91.99	$4.6042e^{8}$

Conclusion

This study was conducted to investigate the optimal materials that can be used to enhance the efficiency of gas turbine blades. The study involved the application of a pressure of 10^6 Pa to blades made of three different materials, namely, magnesium alloy, titanium alloy, and aluminum alloy. The study findings provide significant insights into these materials' structural and thermal performance.

The static structural analysis evaluated maximum stress, strain, and deformations when a pressure of 10^6 Pa was applied. The results showed that titanium alloy outperformed magnesium and aluminum alloy. It demonstrated the least stress and strain values and the least deformation, indicating its superior structural integrity and resistance to applied pressure. This underscores titanium alloy's capability to withstand operational loads more effectively than its counterparts.

Moreover, in the steady-state thermal analysis, the study evaluated each material's total temperature and thermal heat flux at a maximum temperature of 600 C°. The results showed that titanium alloy consistently outperformed magnesium and aluminum alloy regarding total temperature and thermal heat flux. This suggests that titanium alloy exhibits superior thermal stability and heat dissipation characteristics, crucial factors in the demanding conditions of gas turbine operation.

Overall, analyzing static structural and thermal behavior establishes titanium alloy as the optimal material for gas turbine blades. Its exceptional performance in stress resistance, strain tolerance, deformation characteristics, and thermal stability makes titanium alloy the most suitable choice for enhancing the efficiency and durability of gas turbines. This study provides valuable insights into gas turbine materials engineering, contributing to informed decision-making in designing and manufacturing high-performance turbine blades.

Declaration

Acknowledgment: The authors are highly grateful to CECOS University and University of Engineering and Technology, Lahore, Pakistan for the support and facilitation

Funding: This research received no external funding

Conflict of interest: There is no conflict of interest

Author's contribution: Conceptualization, I.U., N.B.; methodology, N.B.; Simulation, I.U,; investigation, N.B.; writing—original draft preparation, I.U,; writing—review and editing, N.B

Data availability: The data presented in this study are available on request

References

Aamir, M., A. Sharif, M. Z. Zahir, K. Giasin and M. Tolouei-Rad (2023). "Experimental assessment of hole quality and tool condition in the machining of an aerospace alloy." Machines **11**(7): 726.

Boshoman, S. B., O. S. Fatoba and T.-C. Jen (2023). Laser Cladding of Titanium Alloys: A Review. 2023 14th International Conference on Mechanical and Intelligent Manufacturing Technologies (ICMIMT), IEEE.

Chamis, C. C. and G. H. Abumeri (2003). Probabilistic Evaluation of Blade Impact Damage.

Chintala, G. and P. Gudimetla (2014). "Optimum material evaluation for gas turbine blade using Reverse Engineering (RE) and FEA." Procedia Engineering **97**: 1332-1340.

Chowdhury, T. S., F. T. Mohsin, M. M. Tonni, M. N. H. Mita and M. M. Ehsan (2023). "A Critical Review on Gas Turbine Cooling Performance and Failure Analysis of Turbine Blades." International Journal of Thermofluids: 100329.

Courtis, M., C. Skamniotis, A. Cocks and P. Ireland (2023). "Coupled aerothermal-mechanical analysis in single crystal double wall transpiration cooled gas turbine blades with a large film hole density." Applied Thermal Engineering **219**: 119329.

Fathyunes, L. and M. Mohtadi-Bonab (2023). "A Review on the Corrosion and Fatigue Failure of Gas Turbines." Metals **13**(4): 701.

Gallardo, J., J. Rodríguez and E. Herrera (2002). "Failure of gas turbine blades." Wear **252**(3-4): 264-268.

Habib, N., A. Sharif, A. Hussain, M. Aamir, K. Giasin and D. Y. Pimenov (2022). "Assessment of Hole Quality, Thermal Analysis, and Chip Formation during Dry Drilling Process of Gray Cast Iron ASTM A48." Eng **3**(3): 301-310.

Habib, N., A. Sharif, A. Hussain, M. Aamir, K. Giasin, D. Y. Pimenov and U. Ali (2021). "Analysis of Hole Quality and Chips Formation in the Dry Drilling Process of Al7075-T6." Metals **11**(6): 891.

Hacker, J. (2000). "Statical Analysis of Manufacturing Deviations and Classification methods for Probabilistic Aero thermal Design of Turbine Blade." Master's thesis, Dept. of Aeronautics and Astronautics.

HAN, J. C. and S. Dutta (2001). "Recent developments in turbine blade internal cooling." Annals of the New York Academy of Sciences **934**(1): 162-178.

Htwe, W. L., H. H. Win and N. A. San (2015). "Design and thermal analysis of gas turbine blade." Intern. J. Mech. and Production Eng **3**(7): 62-66.

Hussain, A., A. Sharif, N. Habib, S. Ali, K. Akhtar, F. Ahmad, M. Salman, W. Ahmad, I. Ullah and M. Ishaq "Effect of Drilling Process Parameters on Brass Alloy 272 Through Experimental Techniques."

Jabbar, A. A., A. Rai, P. R. Reedy and M. H. Dakhil (2014). "Design and analysis of gas turbine rotor blade usingfinite element method." International Journal of Mechanical and Production, ISSN (P): 2249-6890.

Kumar, R. R. and K. Pandey (2017). Static structural and modal analysis of gas turbine blade. IOP Conference series: materials science and engineering, IOP Publishing.

Lim, C.-P. and C. Menq (1994). "CMM feature accessibility and path generation." The International Journal of Production Research **32**(3): 597-618.

Liu, X., X. Han, G. Yin, X. Song and L. Cui (2023). "Design and Processing of Gas Turbine Blades Based on Additive Manufacturing Technology." Micromachines **14**(9): 1675.

Muhammad, R., A. Sharif and M. Siddiqi (2022). "Performance investigation of a single-stage gravitational water vortex turbine accounting for water vortex configuration and rotational speed." Journal of Engineering and Applied Sciences **41**: 44-55.

Naik, G. M., P. Sharma, G. Anne, R. K. Pittala, R. Kumar, G. S. Satapathi, C. S. Kumar and F. Fernandes (2023). "Improvement in Corrosion Performance of ECAPed AZ80/91 Mg Alloys Using SS316 HVOF Coating." Materials **16**(20): 6651.

Noon[1], A. A., M. Arif[1], J. A. K. Tipu[1], A. U. Jabbar, M. U. R. Siddiqi and A. Sharif (2021). "Performance Enhancement of Centrifugal Pump through Cavitation Reduction using Optimization Techniques."

Nourin, F. N. and R. S. Amano (2023). "Heat Transfer Augmentation With Multiple Jet Impingement Cooling on Dimpled Surface for Gas Turbine Blades." Journal of Energy Resources Technology **145**(2): 022101.

Salwan, G. K., R. Subbarao and S. Mondal (2021). "Comparison and selection of suitable materials applicable for gas turbine blades." Materials Today: Proceedings **46**: 8864-8870.

Sharif, A. (2022). "Study on burr formation, tool wear and surface quality in machining Al6063." Journal of Materials and Manufacturing **1**(2): 1-9.

Sharif, A., A. Hussain, N. Habib, W. Alam, M. I. Hanif, A. A. Noon and M. I. Khan (2023). "Experimental investigation of hole quality and chip analysis during the dry drilling process of Al6061-T6." Journal of Materials and Manufacturing **2**(1): 21-30.

Sharif, A., H. Khan, N. Bashir and W. Alam (2023). "Parametric optimization and evaluating mechanical properties of poly lactic acid proceed by FDM additive manufacturing." Journal of Materials and Manufacturing **2**(1): 11-20.

Sharif, A., A. A. Noon, R. Muhammad and W. Alam "Enhancing the performance of Gravitational Water Vortex Turbine through Novel Blade Shape by Flow Simulation Analysis." Journal of Technology Innovations and Energy **2**(2): 30-38.

Sharif, A., M. Siddiqi and R. Muhammad (2020). "Novel runner configuration of a gravitational water vortex power plant for micro hydropower generation." Journal of Engineering and Applied Sciences **39**(1): 87-93.

Sharif, A., M. U. R. Siddiqi, M. Tahir, U. Ullah, A. Aslam, A. K. Tipu, M. Arif and N. A. Sheikh "Investigating the Effect of Inlet Head and Water Pressure on the Performance of Single Stage Gravitational Water Vortex Turbine."

Sharif, A., J. A. K. Tipu, M. Arif, M. S. Abbasi, A. U. Jabbar, A. A. Noon and M. U. R. Siddiqi "Performance Evaluation of a Multi-Stage Gravitational Water Vortex Turbine with optimum number of Blades."

Shoukat, A. A., A. A. Noon, M. Anwar, H. W. Ahmed, T. I. Khan, H. Koten, M. U. Rehman Siddiqi and A. J. I. J. o. R. E. D. Sharif (2021). "Blades Optimization for Maximum Power Output of Vertical Axis Wind Turbine." **10**(3).

Sivakumar, R. and B. Mordike (1989). "High temperature coatings for gas turbine blades: a review." Surface and coatings technology **37**(2): 139-160.

Soori, M., M. Asmael, A. Khan and N. Farouk (2023). "Minimization of surface roughness in 5-axis milling of turbine blades." Mechanics Based Design of Structures and Machines **51**(9): 5213-5230.

Swain, B., P. Mallick, S. Patel, R. Roshan, S. Mohapatra, S. Bhuyan, M. Priyadarshini, B. Behera, S. Samal and A. Behera (2020). "Failure analysis and materials development of gas turbine blades." Materials Today: Proceedings **33**: 5143-5146.

Tari, I. (2000). 3-D simulation of convection in asymmetrically heated turbine blade cooling channels. International Symposium on Heat Transfer in Gas Turbine Systems",,(2000).

Tipu, A. K., M. Arif, A. Sharif and M. U. R. Siddiqi "Implementing Truss Elements for Ensuring Structural Integrity on the Blade of Up-scaled Gravitational Water Vortex Turbine."

Ujade, G. and M. Bhambere (2014). "Review of structural and thermal analysis of gas turbine blade." International Journal of Mechanical Engineering and Robotics Research **3**(2): 347.

Ullah, I. and A. Sharif (2022). "Novel Blade Design and Performance Evaluation of a Single-Stage Savanious Horizontal Water Turbine." Journal of Technology Innovations and Energy **1**(4): 42-50.

Ullah, I., M. U. R. Siddiqi, M. Tahir, A. Sharif, A. A. Noon, J. A. K. Tipu, M. Arif, A. U. Jabbar, S. M. Siddiqi and N. Ullah "Performance Investigation of a Single-Stage Savanious Horizontal Water Turbine with Optimum Number of Blades."

Zhang, Z., L. Yuan, M. Zheng, Q. Wei, D. Shan and B. Guo (2023). "Achievement of high strength and good ductility in the large-size AZ80 Mg alloy using a designed multi-directional forging process and aging treatment." Journal of Materials Processing Technology **311**: 117828.

Journal of Technology Innovations and Energy
https://doi.org/10.56556/jtie.v2i4.691
ISSN: 2957-8809

RESEARCH ARTICLE

Investigation of the Thermophysical Properties of Nanofluids Based on Metal Oxides: Application in Concentrated Solar Power Plants

Fatah Boufoudi[1*], Salah Zouaoui[1], Sofiane Mihoub[2]

[1]Laboratory of Mechanics, Structure and Energetics (LMSE), Faculty of Construction Engineering,UMMTO, B.P.N°17RP,15000,Tizi Ouzou, Algeria
[2]Department of Physics, Faculty of Material Sciences, University of Ibn Khaldoun, 1400 Tiaret, Algeria

Corresponding Author : Fatah Boufoundi:fatah.boufoudi@ummto.dz :ORCID: 0009-0000-3306-4738
Received:09November, 2023, Accepted: 12December, 2023, Published: 14 December, 2023

Abstract

Solar energy is a renewable source of energy that does not emit greenhouse gases. The sun is free, inexhaustible and available all over the world. The sun's rays can be used to produce energy in two ways. The first technique converts the sun's rays into electricity using photovoltaic panels, while the second converts the sun's rays into heat using concentrated solar power plants (CSP). Several studies have been carried out with the aim of improving the performance of these solar power plants in order to achieve high efficiency, which is the case in our study. In this work a numerical study was carried out on the effect of nanoparticles on the thermophysical properties of nanofluids with the aim of determining the most optimal nanofluid for use as a heat transfer fluid in concentrated solar power plants. The nanoparticles examined were metal oxides (SIO_2, MgO and Fe_3O_4), which were dispersed in Therminol VP-1 and Syltherm 800. The thermophysical properties examined were density, thermal conductivity and heat capacity. To carry out this study, we set the temperature from 200 to 400°C at the same operating temperature as the concentrating solar power plant.After evaluating the effect of nanoparticles on the thermophysical properties, we studied the behaviour of the CSP plant based on nanofluids using SAM (System Advisor Model) software. The results obtained are very encouraging and show that the addition of nanoparticles to a base fluid improves its thermophysical properties compared with the pure base fluid, and the rate of improvement in thermal conductivity exceeds 9%. We also found that the nanofluid (Fe_3O_4 /Therminol Vp1) is the best selected for use as a heat transfer fluid in concentrated solar power plants with an efficiency and thermal energy produced equal to 40.87% and 588164 MWht, respectively.

Keywords: Energy ; Nanofluid ; Efficiency ; SAM ; Conductivity.

Introduction

Renewable energies are seen as an key component of any sustainable energy development strategy. The inclusion of renewable energies in the national energy mix constitutes a major challenge in terms of conserving fossil resources, diversifying electricity production and contributing to sustainable development.

Salah Zoouaoui : Salah.zouaoui@ummto.dz
Sofiane Mihoub : mihoubsofiane@yahoo.fr :ORCID: 0000-0002-0327-6999

Considerable research has been carried out into solar energy (Huang et al. 2020), with the aim of improving its performance, because today solar energy is one of the solutions that can replace fossil fuels such as gas, oil, nuclear power, etc., which are responsible for pollution and greenhouse gas emissions. etc, which are responsible for pollution and the emission of greenhouse gases, causing climate change which is a real problem that puts the planet earth at risk(Huang et al. 2020)(Alnaqi et al. 2019). So, the use of energy of solar origin proves to play an important role in reducing these problems that are linked to the exploitation of fossil fuels, because, solar energy is an energy considered clean and renewable(Jan and Balaji 2022)(Desideri et al. 2013), and one of the solutions proposed to meet the energy needs of society such as electricity which is applied in several areas; industry, transport, health, etc.

Generally speaking, there are two ways of converting solar energy into electricity: directly using photovoltaic panels or indirectly using concentrated solar power (CSP) plants. In this case, the sun's rays are concentrated on a receiver into which a heat transfer fluid flows, in which the solar energy is transformed into thermal power. This energy is then conveyed by a fluid and transformed into electricity using turbines that drive the alternator (Boufoudi et al. 2023)(Mwesigye and Meyer 2016). The fig.1 shows the different types of CSP plants.Figure 1 shows the different types of concentrated solar power plants. Improving the performance of a concentrating solar power plant is one of the objectives of most of the researchers in the world. The heat transfer fluid is one of the techniques used to improve the performance of a solar thermal plant. Other methods used to improve the performance of a thermal system include magnetic fields and corrugated channels. However, researchers are currently working on a new technique that involves replacing conventional fluids with nanofluids(Boufoudi et al. 2023)(Bekhti and Rachid Saim 2022).

To improve the efficiency and performance of a solar power plant or solar collector, researchers and specialists in this field generally consider modifying the heat transfer fluid. One of the most effective methods is to use nanofluids as the working fluid. The most commonly examined nanoparticles are (Al_2O_3, Al, Cu, TiO_2, SiO_2, Au, Ni, ZnO and Fe_3O_4) which can be dispersed in a fluid such as water, gas or thermal oil(Bekhti and Rachid Saim 2022). A great deal of research has been devoted to this type of technique, i.e. nanofluids, notably the work of (Potenza et al. 2017)who studied the effect of integrating nanofluids (CuO/Gas) into a solar receiver with a surface area of 4 m2 and consisting of two coaxial tubes. They proved that the use of nanofluids improves the efficiency and thermal performance of the prototype studied . (Kundan and Sharma 2013) observed that when nanoparticles of CuO nanoparticles are mixed with water, due to the increased optical properties, the heat absorption capacity of the nanofluids increases, resulting in a higher temperature difference. The density of CuO is higher than that of water, so after suspension, the heat capacity of the nanofluid increases, which improves the efficiency of the collector ,They may have found that the same as the efficiency of the collector of the temperature difference of the nanofluid increases, they concluded that nanofluids have potential for solar thermal applications and that nanofluids can be a good solution for limiting the heat transfer of conventional.(Allouhi et al. 2018) presented a one-dimensional mathematical model integrated in MATLAB to verify the effect of incorporating nanoparticles (TiO_2, Al_2O_3 and CuO) into a base fluid (synthetic oil) to be used as a working fluid in the PTC at medium temperature. They found that the use of nanofluids based on TiO_2, Al_2O_3 and CuO improved the performance of the collectors by around 1.14%, 1.17% and 1.06%, respectively, compared with the pure fluid, thereby improving energy efficiency.(Seyed Ebrahim Ghasemi and Ranjbar 2017) numerically examining the efficiency of the solar system and its performance based on the nanofluid (Al_2O_3/Therminol 66) with different concentrations and volume fractions, using CFD they found that the heat transfer and thermal performance of the nanofluid were improved compared with the pure base fluid, and that increasing the volume fraction leads to an improvement in thermal conductivity.(Liang et al. 2018)also numerically examined the efficiency and thermal performance of a direct-

absorption parabolic trough solar collector based on CuO/oil nanofluids. They demonstrated that the efficiency of the nanofluid-based collector improved by 10% compared with the pure fluid-based collector.(Abid, Ratlamwala, and Atikol 2017)carried out a comparative analysis of a parabolic trough solar collector and a parabolic trough solar collector placed separately with a Rankine cycle and an electrolyser, with the aim of examining and numerically evaluating their performance. A nanofluid based on Al_2O_3 and Fe_3O_4 and molten salt was examined. They concluded that the net power produced by the PTC-fed power plant is better than that of the parabolic trough power plant - their values are 8.17 and 6.23 KW respectively. They also found that ferric oxide (Fe_3O_4) and aluminium oxide (Al_2O_3) produce higher net power and better performance than molten salts.(Seiyed E Ghasemi and Ranjbar 2016) have numerically simulated the heat transfer inside the receiver tube of the PTC solar collector with Al_2O_3/Water and CuO/Water nanofluids as the working fluid, and have also examined the effect of the volume fraction on the thermal and hydrodynamic performance of the collector and on the heat flow. Their results show that the use of nanofluids as heat transfer fluids improves heat transfer by 28% for the (Al_2O_3/Water)-based nanofluid and by 35% for the (CuO/Water)-based nanofluid for a volume fraction equal to 3%.

The literature search showed that studies of the impact of nanofluids on their use in solar thermal power plants, have attracted enormous attention because of their excellent thermophysical properties, which could contribute to improving heat transfer.The main objective of this work is to provide two different studies, the first study consists of investigating the effect of nanoparticles on the thermophysical properties of nanofluids, the second part consists of evaluating the behaviour of the concentrated solar power plant based on nanofluids and comparing it with their pure base fluids.

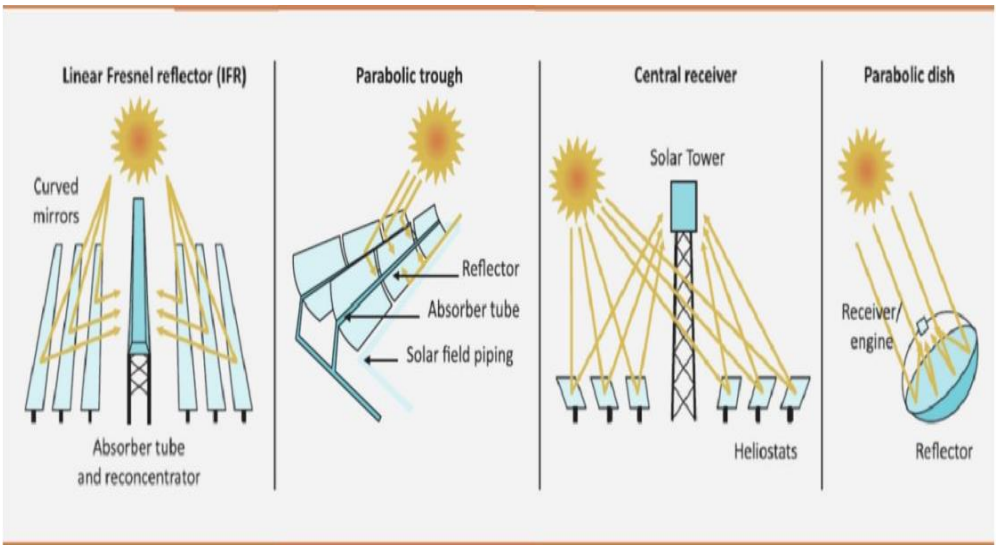

Figure. 1. The different types of CSP plants (Mihoub and Benahmed 2022)

Methodology

In this study, we will examine the effect of volume concentration and temperature on the thermal properties of nanofluids with different types of nanoparticles based on metal oxides (SIO_2 ,MgO and Fe_3O_4) compared with their pure base fluids, and select the best performing nanofluid for use in concentrating solar power plants as a heat transfer fluid. To answer these questions, a numerical study was carried out using MATALB software. We then integrated the nanofluids into the solar power plant as a working fluid and ran a numerical simulation to calculate its efficiency and quantify the energy produced over a year.

Liquids are normally used as a means of transporting energy for solar thermal collectors. Commonly used liquids are water, silicone oil, Therminol and a mixture of two liquids. The addition of small quantities of nanoparticles to these fluids (low-concentration nanofluids) improves their thermal and optical properties that play an essential role in theconversion. The nanofluid has attracted a great deal of attention because of its superior thermal properties. The thermophysical properties of the nanoparticles (SIO_2 ,MgO and Fe_3O_4) are presented in the table below (table-1).

Table 1: Thermophysical properties of the nanoparticles (SIO_2 ,MgO and Fe_3O_4)(Kadhim and Abdul Hassan 2016)(Ghalambaz et al. 2020)

	SIO_2	MgO	Fe_3O_4
Density (kg m^{-3})	2200	3570	5175
Thermal conductivity ($W.m^{-1}.K^{-1}$)	1.3	5.11	7
Specific heat (kj/kg.K)	0.740	0.877	0.680

Governing equations

There are numerous models in the literature for determining nanofluid properties as a function of base fluid and volume fraction, but each correlation is applicable to a given situation.

- Density

Density can be determined using the classic formula of Pak et al (Cho, Pak et, OXIDE, and PARTICLES 2013):

$$\rho_{nf} = (1 - \varphi) * \rho_{fb} + \varphi * \rho_{np} \quad (1)$$

- Thermal conductivity

The evolution of nanofluid thermal conductivity as a function of volume fraction, base fluid thermal conductivity and nanoparticle thermal conductivity is presented in Maxwell's model(Xue 2003).

There are several theoretical models that can be used to estimate the thermal conductivity of suspensions under certain conditions. In this study, we use the most widely used model for nanofluids. In general, the most widely used model is the Maxwel model because it was the first to derive a model for estimating the thermal conductivity of a suspension containing particles.

Maxwell's model is satisfactory for suspensions containing spherical particles with relatively low volume concentrations, but does not take into account the effect of particle size or shape. It should also be noted that the effect of inter-particle interactions is neglected in this model.

$$\frac{\lambda_{nf}}{\lambda_{fb}} = \frac{\lambda_p + 2\lambda_{fb} - 2\varphi(\lambda_{fb} - \lambda_p)}{\lambda_p + 2\lambda_{fb} + \varphi(\lambda_{fb} - \lambda_p)} \quad (2)$$

- Specific heat:

The model Leong et al (Leong et al. 2017) Is among the model used for the determination of The specific heat of nanofluid taking into consideration the percentage of nanoparticles and the type of base fluids and density of nanofluids .

$$C_{pnf} = \frac{\varphi \rho_p C_{pp} + (1-\varphi)\rho_{bf} C_{pfb}}{\rho_{nf}} \quad (3)$$

SAM indicates the total amount of energy produced by the system in the first year, generally for all performance models except solar water heating systems, annual energy equals the sum of hourly energy.

- Annual Energy Saved (Q) kWh/year(System Advisor Model (SAM) 2020).

  The annual energy saved is the electrical energy that the project avoids using thanks to the solar heating system. It is given by the following formula:

$$Q = \left(wt_s - w_s - p_p\right) \quad (4)$$

Where, $wt_s$is a value related to the energy obtained without solar energy

w_s with solar energy,

p_p is the power of the pump.

The thermal power of the field at design is given by the following formula:

$$Field\ Thermal\ Power\ (MWt)\ =\ SM\ \times\ Cycle\ Thermal\ Power\ (MWt) \quad (5)$$

The solar multiple (SM) is defined as the ratio between the real power collected in the solar field and the power needed to operate the turbine, the SM is given by the formula (4) (Mihoub and Beltagy 2017)(Izquierdo, and Montan 2010) :

$$SM = \frac{P_t}{P_s} \quad (6)$$

Where Pt : Receiver Thermal Power (MWt), P_s : Heat Sink Power (MWt).

The capacity factor is given as the ratio of the electrical output produced by the system in its first year to the nominal output that should be produced when operating at full capacity..The capacity factor can be calculated by the following formula (Mihoub, Chermiti, and Beltagy 2017)(Serradj and Fadlallah 2022):

$$CF = \frac{P_e}{P_n} \quad (7)$$

Where; Pe: Electrical power produced by the system in its first year.

Pn; Nominal production that must be produced when it operates at its capacity

Results and discussion

Improving the thermal properties of heat transfer fluids is currently the most promising way of increasing the performance of heat exchangers, and in general of systems where heat transfer is an important part of the energy flow. The effect of temperature and nanoparticle volume concentration on the density of nanofluids (MgO/Therminol VP1,SiO_2 /Therminol VP1 ,Fe_3O_4/ Therminol VP-1) and (MgO/Syltherm 800,SiO_2 / Syltherm 800,Fe_3O_4/ Syltherm 800) are shown in fig.2. Firstly, we set the volume concentration at 1% and varied the temperature from 200 to 400°C. We found that increasing the temperature caused the density to

decrease. In the second step, we set the temperature at 400°C and varied the volume fraction from 0 to 1%, noting that each time we added concentration, the density increased in parallel, as shown in fig2.

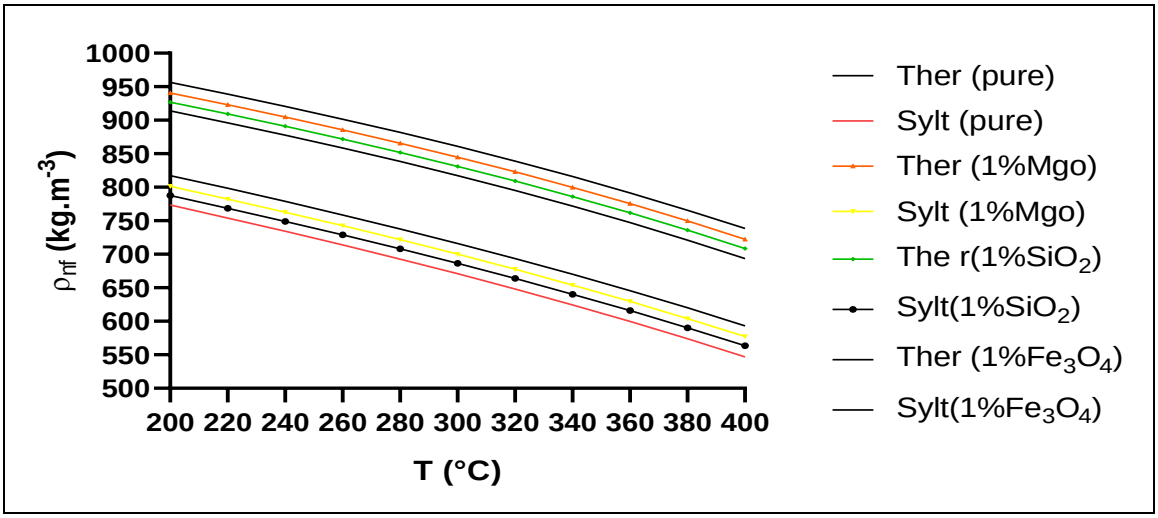

Figure.2. Effect of temperature and nanoparticle concentration on nanofluid density.

The thermal conductivities of eight nanofluids are shown in fig-3, for a constant value of nanoparticle concentration Φ = 1%, decreasing with increasing temperature. We then compared each nanofluid with its pure fluid, and noted that the nanofluids have a higher conductivity than the pure fluids, and the presence of MgO, $SiO_2$and Fe_3O_4nanoparticles improves the conductivity of the synthetic oils. We also see that the nanofluid (Fe_3O_4-Therminol VP -1) has a higher conductivity value than the rest of the nanofluids.

The improvement in thermal conductivity is very responsive when adding the volume fraction as shown in fig.3, and the best conductivity shown has the volume concentration equal to 4%, and the conductivity of nanofluid MgO/Therminol VP-1 and Fe_3O_4 /Therminol VP-1 is higher compared to other nanofluids.

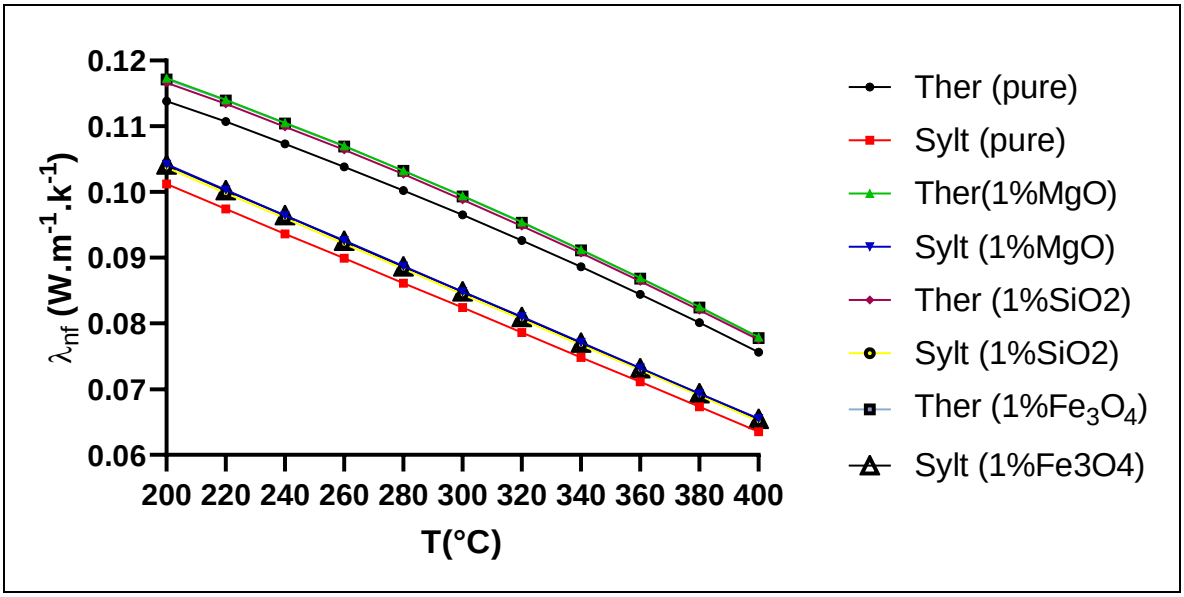

Figure.3. Effect of temperature and volume fraction on the thermal conductivity of nanofluids

The effect of temperature and nanoparticle volume concentration on the specific heat of the nanofluids (MgO/Therminol VP1,SiO2 /Therminol VP1 , Fe_3O_4/ Therminol VP1) and (MgO/Syltherm 800,SiO_2 / Syltherm 800,Fe_3O_4/ Syltherm 800) are shown in fig.4. It can also be seen that the specific heat of MgO/Therminol VP-1 is superior to that of other nanofluids when nanoparticles are added, which explains the important role of nanoparticles, since improved specific heat improves storage capacity in concentrated solar power plants.

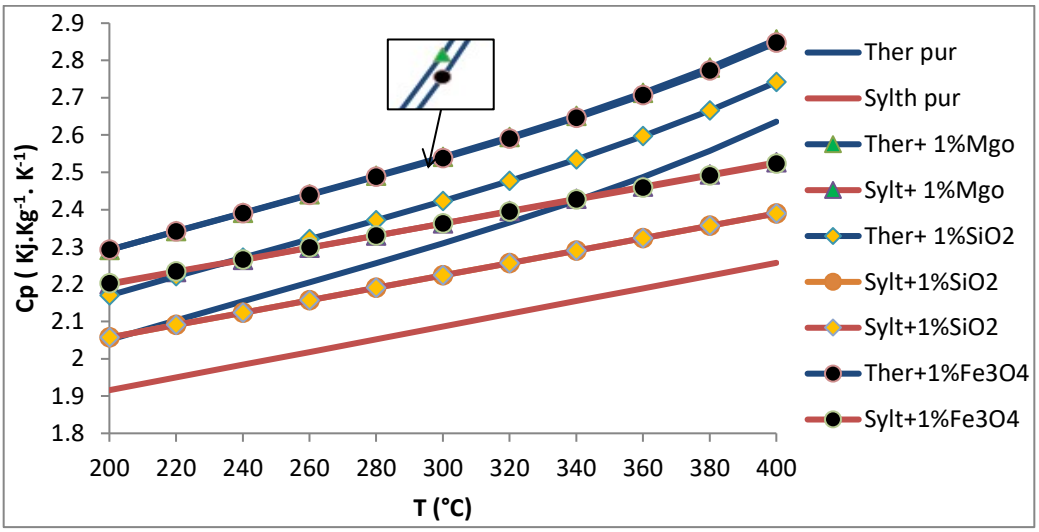

Figure.4. Effect of temperature and volume fraction on the specific heat of nenofluids

The figure below (fig-5) shows the effect of integrating nanofluids on the efficiency of the concentrated solar power plant based on nanofluids (Mgo, SIO2 and Fe_3O_4). We compared the efficiency of the plant with that of pure nanofluids and found that the addition of nanofluids plays an important role in improving efficiency. The best performing nanofluid is Therminol Vp1/Fe_3O_4 with an efficiency of 41.78%.

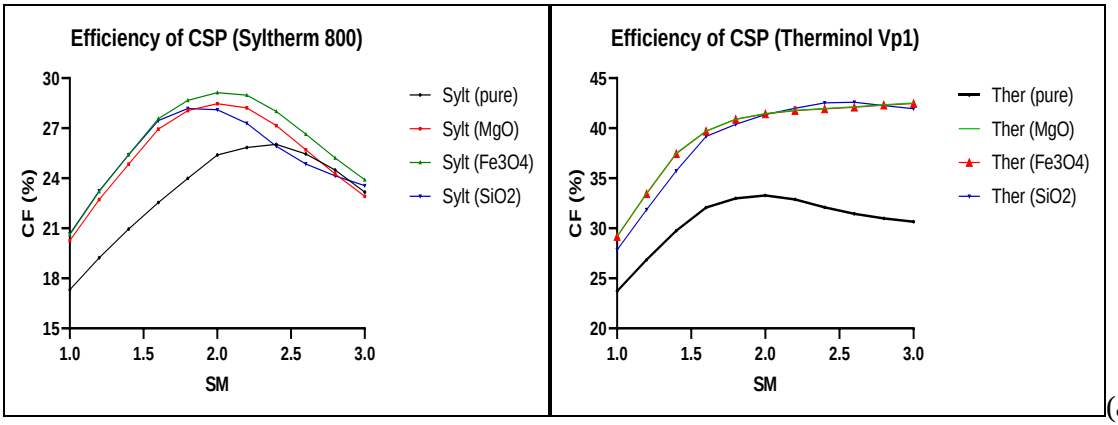

(a)

(b)

Figure 5 : Efficiency of the concentrating solar power plant: (a) based on Syltherm 800 ,(b) based on Therminol Vp 1.

The figures 6 and 7 show thermal energy to the power block and thermal power produced by the field as a function of nanofluids and solar multiple. The results clearly show that the amount of energy produced for a nanofluid is greater than for a pure base fluid, which explains why the nanofluid plays an important role in increasing the energy produced.

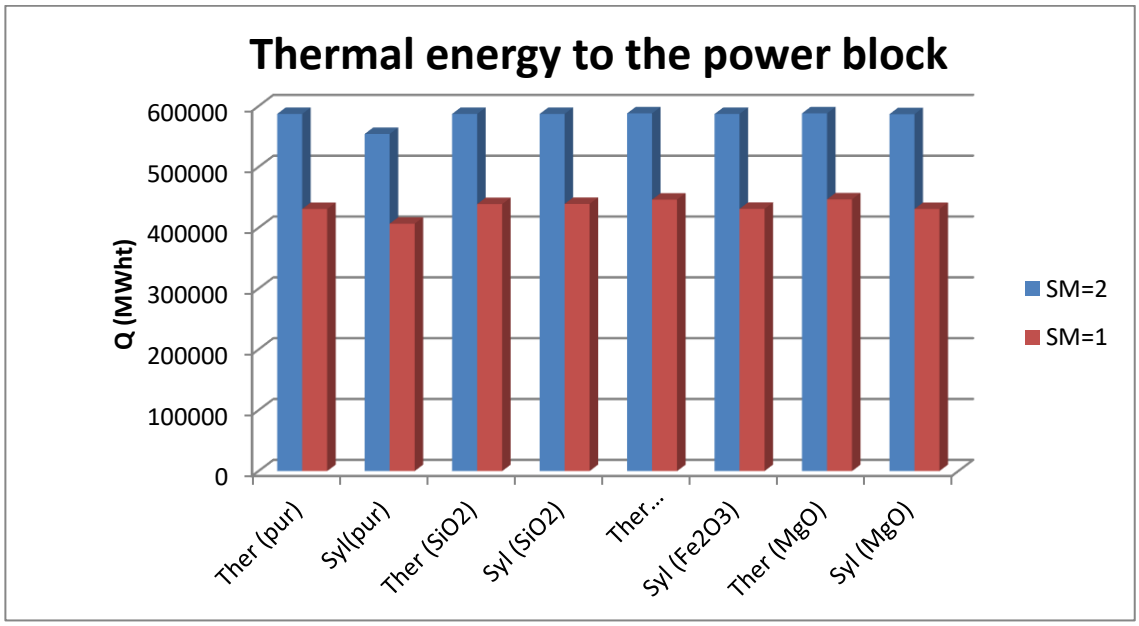

Figure.6 : Thermal energy to the power block as a function of nanofluids and SM

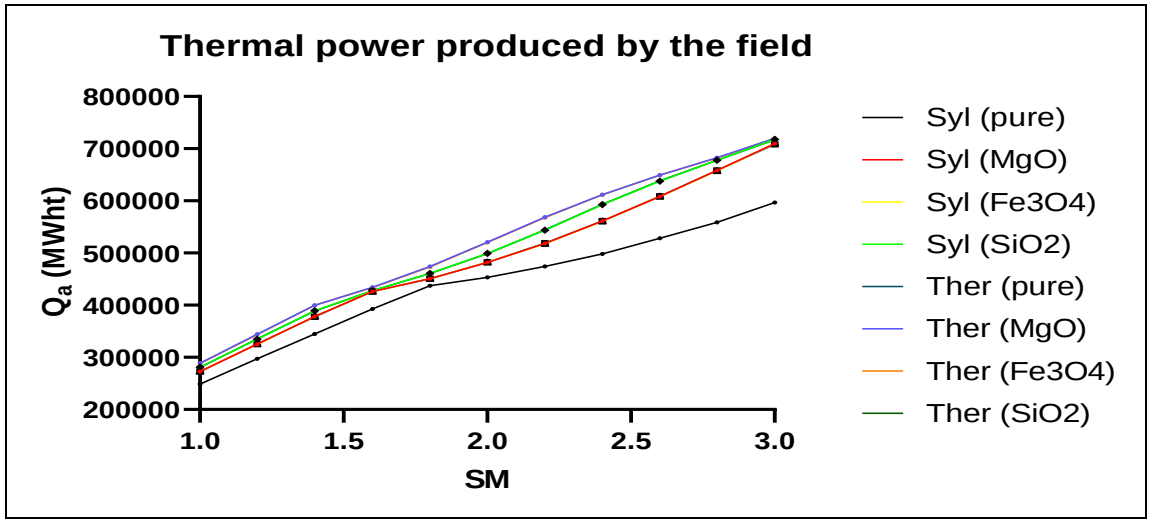

Figure.7 : Thermal power produced by the field as a function of nanofluids and SM

Table 2 show the comparison of the results obtained in this study with the studies a little similar and either with storage or without storage. We found that the results obtained are really reliable and encouraging.

Table 2: Comparison of the results with other studies

	HTF fluid	CSP technology	Storage	Plant capacity (MW)	SM	CF (%)
This study	Nanofluids	Solar-gas hyrid	No storage	50	2	27-42
(Mihoub, and Beltagy 2017)	Therminol VP-1	Solar-gas hyrid	8H	50	3.1	43
(Liu et al. 2016)	Synthetic oil	Current trough	6H	100	-	20-25 40-53
(Ikhlef and Larbi 2020)	Therminol VP-1	Solar-gas hyrid	No storage	25	1.6	47

Conclusion

A new term has come into the limelight that has weighed on the world and is the subject of a great deal of attention: this term is nanofluid.In this work, we presented and interpreted the simulation results obtained on the thermo-physical properties of nanofluids,for use as heat transfer fluids (HTF) in concentrated solar thermal power plants. For the nanofluids used in this study, we used different fluids based on synthetic oils. The effects of temperature and nanoparticle concentration on the properties were determined.In this numerical work using the MATLAB code, the effect of nanoparticle concentration and temperature on the thermophysical properties of nanofluids was investigated, and we concluded that: the integration of MgO, SiO_2, Fe_3O_4 nanoparticles in Syltherm 800 and Therminol VP-1 oily base fluids shows a considerable improvement in thermal conductivity, density and specific heat. The results show that the Fe_3O_4 / Therminol VP-1 nanofluid is most suitable for use as a heat transfer fluid in concentrated solar power plants, given its higher value.
The most important conclusions of this study are :

- Thermal conductivity is a fundamental parameter for heat transfer. Heat is conducted more quickly by solid particles compared with liquid, especially as we used the oxide-metallic nature,
- Nanofluids are ready for applications in solar thermal power plants, because they have not lost or destroyed their thermophysical properties despite the high temperature. Almost all the research is agreed that nanofluids will improve the thermal properties of HTF. Nanofluids are expected to trigger a series of industrial revolutions over the next two decades,
- The maximum annual energy produced is 588164 MWht and 588263 MWht for Fe_3O_4 / Therminol VP-1 and MgO / Therminol VP-1, respectively.
- The presence of nanaparticles reduces the specific heat, which is not acceptable for heat transfer. Therefore, these nanofluids are better as HTF and are not suitable for thermal energy storage.
- The efficiency of nanofluid-based concentrated solar power plants is better than that of pure working fluids.
- The nanofluid play a major role in improving the conductivity and density.

The research prospects are vast, and we can mention just a few, such as the integration of nanofluids into another type of solar power plant, namely the Fresnel mirror solar power plant or the tower solar power plant.Conducting an experimental study of nanofluid-based solar power plants. Simulations can also be carried out on the behaviour of flat solar thermal capture based on nanofluids. Study the fluid in a heat exchanger to reduce its viscosity with calculation software"Fluent" and GAMBIT.

Declaration

Acknowledgment: The authors would like to thank UMMTO University and Ibn Khaldoun University for their support and assistance.

Funding: This research received no external funding

Conflict of interest: There is no conflict of interest

Authors contribution: Conceptualization, F.B., S.M.; methodology, S.Z.;Simulation, S.M,; investigation, F.B.; writing—original draft preparation, S.Z,;writing—review and editing, F.B

Data availability: The data presented in this study are available on request

References

Norberto Fueyo, Salvador Izquierdo, and Carlos Montan. 2010. "Analysis of CSP Plants for the Definition of Energy Policies : The Influence on Electricity Cost of Solar Multiples , Capacity Factors and Energy Storage." 38: 6215–21.https://doi.org/10.1016/j.enpol.2010.06.009

Abid, Muhammad, Tahir A H Ratlamwala, and Ugur Atikol. 2017. "ScienceDirect Solar Assisted Multi-Generation System Using Nanofluids : A Comparative Analysis." *International Journal of Hydrogen Energy*: 1–14. http://dx.doi.org/10.1016/j.ijhydene.2017.05.178.

Allouhi, A et al. 2018. "Energy and Exergy Analyses of a Parabolic Trough Collector Operated with Nano Fl Uids for Medium and High Temperature Applications." *Energy Conversion and Management* 155(August 2017): 201–17. http://dx.doi.org/10.1016/j.enconman.2017.10.059.

Alnaqi, Abdulwahab A. et al. 2019. "Effects of Magnetic Field on the Convective Heat Transfer Rate and Entropy Generation of a Nanofluid in an Inclined Square Cavity Equipped with a Conductor Fin: Considering the Radiation Effect." *International Journal of Heat and Mass Transfer* 133: 256–67. https://doi.org/10.1016/j.ijheatmasstransfer.2018.12.110.

Bekhti, MOHAMMED, and Rachid Saim. 2022. "Numerical Study of Convective Heat Transfer and of Turbulent Forced of Differents Nanofluids in Channel." *Journal of Technology Innovations and Energy* 1(1): 1–8. https://doi.org/10.56556/jtie.v1i1.127

Boufoudi, Fatah, Sofiane Mihoub, Salah Zouaoui, and Abdelillah Benahmed. 2023. "Receiver Parameter Optimization for Nanofluid-Based Parabolic Trough Concentrating Plant: A Case Study." *Energy Sources, Part A: Recovery, Utilization and Environmental Effects* 45(2): 5559–76. https://doi.org/10.1080/15567036.2023.2209036.

Boufoudi, Fatah, Salah Zouaoui, Sofiane Mihoub, and and Tahar Tayebi , Abdelillah Benahmed. 2023. "Numerical Investigation of the (Mono-Hybrid) Nanofluid Thermophysical Properties For." 12(5): 1233–41. https://doi.org/10.1166/jon.2023.2015

Cho, Pak et, HYDRODYNAMIC AND HEAT TRANSFER STUDY OF, DISPERSED FLUIDS WITH SUBMICRON METALLIC OXIDE, and 1980 PARTICLES. 2013. "Hydrodynamic and Heat Transfer Study of Dispersed Fluids With Submicron Metallic Oxide." *Experimental Heat Transfer : A Journal of , Thermal Energy Transport , Storage , and Conversion* (January 2013): 37–41.

Desideri, U., F. Zepparelli, V. Morettini, and E. Garroni. 2013. "Comparative Analysis of Concentrating Solar Power and Photovoltaic Technologies: Technical and Environmental Evaluations." *Applied Energy* 102: 765–84. http://dx.doi.org/10.1016/j.apenergy.2012.08.033.

Ghalambaz, Mohammad, Ali Doostani, Ehsan Izadpanahi, and Ali J. Chamkha. 2020. "Conjugate Natural Convection Flow of Ag–MgO/Water Hybrid Nanofluid in a Square Cavity." *Journal of Thermal Analysis and Calorimetry* 139(3): 2321–36. https://doi.org/10.1007/s10973-019-08617-7.

Ghasemi, Seiyed E, and A Ranjbar. **“** Thermal performance analysis of solar parabolic trough collector using nanofluid as working fluid: A CFD modelling study **.”** *Journal of Molecular Liquids*.
. http://dx.doi.org/10.1016/j.molliq.2016.06.091.

Ghasemi, Seyed Ebrahim, and Ali Akbar Ranjbar. 2017. “ScienceDirect Effect of Using Nanofluids on Efficiency of Parabolic Trough Collectors in Solar Thermal Electric Power Plants.” *International Journal of Hydrogen Energy*: 1–9. http://dx.doi.org/10.1016/j.ijhydene.2017.07.087.

Huang, Ming-hua et al. 2020. “Experimental and Numerical Studies for Applying Hybrid Solar Chimney and Photovoltaic System to the Solar-Assisted Air Cleaning System.” *Applied Energy* 269(May): 115150. https://doi.org/10.1016/j.apenergy.2020.115150.

Ikhlef, Khaoula, and Salah Larbi. 2020. “Techno-Economic Optimization for Implantation of Parabolic Trough Power Plant : Case Study of Algeria.” 063704(November).https://doi.org/10.1063/5.0013699

Jan, Kowser Ali, Shubarat Shameem, and R Balaji. 2022. “An Empirical Analysis of Climate Change Mitigation by Solar Energy.” Journal of Technology Innovations and Energy : 37–41. https://doi.org/10.56556/jtie.v1i4.411

Kadhim, Zena K., Muna S. Kassim, and Adel Y. Abdul Hassan. 2016. “Effect of (MGO) Nanofluid on Heat Transfer Characteristics for Integral Finned Tube Heat Exchanger.” *International Journal of Mechanical Engineering and Technology* 7(2): 11–24.

Kundan, Lal, and Prashant Sharma. 2013. “Performance Evaluation of a Nanofluid (CuO-H 2 O) Based Low Flux Solar Collector.” *International Journal of Engineering Research Volume* 112(2): 108–12.

Leong, K Y et al. 2017. “Synthesis and Thermal Conductivity Characteristic of Hybrid Nano Fl Uids – A Review.” *Renewable and Sustainable Energy Reviews* 75(November 2016): 868–78. http://dx.doi.org/10.1016/j.rser.2016.11.068.

Liang, Hongbo et al. 2018. “Study on the Thermal Performance of a Novel Cavity Receiver for Parabolic Trough Solar Collectors.” *Applied Energy* 222(April): 790–98. https://doi.org/10.1016/j.apenergy.2018.04.030.

Liu, Ming et al. 2016. “Review on Concentrating Solar Power Plants and New Developments in High Temperature Thermal Energy Storage Technologies.” *Renewable and Sustainable Energy Reviews* 53: 1411–32. http://dx.doi.org/10.1016/j.rser.2015.09.026.

Mihoub, Sofiane, Ali Chermiti, and Hani Beltagy. 2017. “Methodology of Determining the Optimum Performances of Future Concentrating Solar Thermal Power Plants in Algeria.” *Energy* 122: 801–10.

Mihoub, Sofiane, Beltagy Hani, and Abdelillah Benahmed. 2022. “Sustainable Potential of Concentrating Solar Power Plants : A Comparative Study.” 58(5): 675–88.

Mwesigye, Aggrey, Zhongjie Huan, and Josua P. Meyer. 2016. “Thermal Performance and Entropy Generation Analysis of a High Concentration Ratio Parabolic Trough Solar Collector with Cu-Therminol®VP-1 Nanofluid.” *Energy Conversion and Management* 120: 449–65. http://dx.doi.org/10.1016/j.enconman.2016.04.106.

Potenza, Marco, Marco Milanese, Gianpiero Colangelo, and Arturo De Risi. 2017. “Experimental Investigation of Transparent Parabolic Trough Collector Based on Gas-Phase Nanofluid.” *Applied Energy* 203: 560–70. http://dx.doi.org/10.1016/j.apenergy.2017.06.075.

Serradj, D E Benhadji, and A B Sebitosi S O Fadlallah. 2022. “Design and Performance Analysis of a Parabolic Trough Power Plant under the Climatological Conditions of Tamanrasset , Algeria.” *International Journal of Environmental Science and Technology* 19(4): 3359–76. https://doi.org/10.1007/s13762-021-03350-x.

System Advisor Model (SAM).” 2020. Available at: https://www.google.com/search?q=System+Advisor+Model&oq=System+Advisor+Model+&gs_lcrp=EgZjaHJvbWUyCggAEEUYFhgeGDkyBwgBEAAYgAQyCAgCEAAYFhgeMggIAxAAGBYYHjIICAQQABgWGB4yCAgFEAAYFhgeMggIBhAAGBYYHjIICAcQABgWGB4yCAgIEAAYFhgeMggICRAAGBYYHtIBCTMwNjlqMGoxNagCALACAA&sourceid=chrome&ie=UTF-8 (Accessed August 4, 2023).

Xue, Qing Zhong. 2003. “Model for Effective Thermal Conductivity of Nanofluids.” *Physics Letters, Section A: General, Atomic and Solid State Physics* 307(5–6): 313–17.

Journal of Technology Innovations and Energy
https://doi.org/10.56556/jtie.v2i4.713
ISSN: 2957-8809

RESEARCH ARTICLE

Sustainable Financial Technology through Regulation Technology: The Asian Experience

Shahid Hussain[1*], Saad ur Rehman[2]

[1]Khwaja Fareed University of Engineering and Information Technology, Rahim Yar khan, Pakistan
[2]Superior University, Rahim Yar Khan, Pakistan

Corresponding Author: Shahid Hussain: shahid.randhawa@live.com
Received: 02 December, 2023, Accepted: 15 December, 2023, Published: 16 December, 2023

Abstract
Therefore, it is critical to study the legal challenges that impede the development of Fintech using an analytical methodology and a bibliographic collection of legal answers in order to create an appropriate RegTech that authorizes their development. The financial technology (Fintech) industry is often believed to have great promise for bringing about a more equitable and sustainable society. That is to say, effective use of this technology could help bridge the gap across the world's socioeconomic classes. However, up to now, the particular legislative frameworks (RegTech) that have been built for Fintech have made its adoption more challenging in addition to the general lack of faith in new technology. However, in order to consolidate Fintech, it is vital to create the right regulations that will make these novel technologies become standard components of our financial system. By focusing on the protections built into this fundamental right, the key challenge that must be overcome is the legal protection of personal data. As a result, if the legal system is going to be ready for the Digital Revolution, people can't worry about losing rights or seeing an increase in inequality.

Keywords: Big Data; Data Privacy; Sustainable FinTech; Regulatory Technology; Transparency in Algorithms

Introduction

Because of the proliferation of the Internet and advances in ICT, society has undergone profound transformations, with a new complex regime of interpersonal ties resulting in a globalization of the economy and financial markets across nations (Ambastha *et al.*, 2022). The so-called "information society" has arisen as a result of the increasing disparity in standard of living between the world's wealthy and developing nations, which has been exacerbated by this transformation (Campbell-Verduyn and Lenglet, 2022). However, the Internet's revolutionary impact on interpersonal connections proves that it is more than just a means of communication. The Internet is much more than that; it is the means by which a civilization with a sense of self-identity articulates its ideas and facilitates interaction between the real world and the virtual one (Hamdan Allam *et al.*, 2021). Internet-related scientific advances, such as big data, cloud computing, blockchain technology, and the development of artificial intelligence, are all propelling the digital development of human society.

Saad ur Rehman: saadateeq195@gmail.com

These fields could be thought of as the technologies that will keep humankind going through a new time of disruption, ushering in the so-called Fourth Industrial Revolution (Arner, 2016; Arner, Barberis and Buckley, 2017). The Information Technology Revolution is an alternative. We foresee a profound alteration in people's behaviors, relationships, and notions that will force many facets of society to adapt to digital media, despite the fact that this revolution has only begun to take its initial steps towards fruition (Barrell and Davis, 2011). Thus, Fintech has emerged as a powerful instrument for promoting economic growth and social cohesion through a broad range of stakeholders. Keeping in mind the social balance that inspires the values of this century, governments that promote Fintech adequately may assist achieve international, communitarian, and national goals (Chen *et al.*, 2017).

In order to ensure the long-term viability of the Fintech industry, this paper examines the sector from a legal perspective, specifically from the perspective of RegTech, which consists of the ever-increasing "risk-management mechanisms, internal controls, and compliance requirements" imposed by monetary authorities. After situating the Pakistani digital strategy within the broader "2030 Agenda" (ADB) and "2020 Asian developing countries" frameworks, this paper examines the big data techniques that employ the Web's indexed information to construct user profiles (Suzuki, 2015; Rahi *et al.*, 2019). To this end, it is important to comprehend the inner workings of big data, including its foundational components, algorithmic architecture, and decision-making profiles (see Figure 1). While there is a dearth of research on the RegTech issues that impede the spread of innovative technologies, this study seeks to rectify that. In addition to being accorded specific protection under the Asian developing countries legal framework, the right to privacy in one's own data is a basic part of the Pakistani Constitution. As a result, governments and businesses alike must comply with the requirements set forth in Regulation (General Data Protection Regulation). The right to be free from automated processing (i.e., processing that does not require human intervention) and the principle of data minimization fall under this category. None of these problems has a simple answer, which is why they all need careful examination to strike a balance between technology and the law (Gurung and Perlman, 2018; von Solms, 2021).

That's why this document is structured the way it is: Section II then goes on to define Fintech, its distinguishing features, and the several kinds of firms that fall under this umbrella. Ending poverty and achieving the so-called "Sustainable Development Goals" (SDGs) of eradicating hunger in the world, enhancing educational opportunities, and fostering sustained, inclusive, and sustainable economic growth, full and productive employment, and decent work for all while also creating a more open and participatory government, Section III discusses how Fintech can be used in the public sector to accomplish these aims. Personal information culled from various sources is a key ingredient in its creation. Next, the data are fed into the algorithms that set up big data, or the basic artificial intelligences, and those systems are tasked with creating predictions.

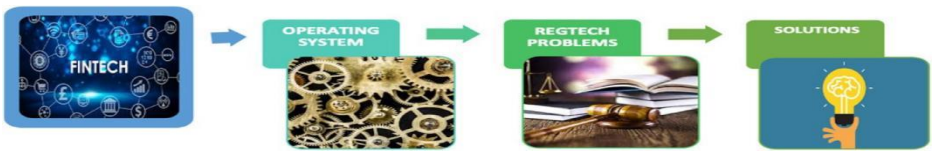

Figure 1: An organizational diagram for the paper.
Source: Authors' work.

However, while creating these apps, developers frequently overlook the additional safeguards and regulatory requirements that come into play due to the sensitive nature of the data being handled. This research can shed light on the most pressing legal flaws of these systems, paving the way for the smooth incorporation and

future growth of Fintech. Section V concludes with a summary and discussion of the legal considerations involved in bringing together and applying these technologies to promote societal development.

Literature review

While many nations have rushed to adopt new technology associated with the "Digital Revolution," few have stopped to assess the impact that doing so will have on their economy' diverse sectors. For this reason, they have chosen environmentally responsible and socially inclusive economic development (Utami and Septivani, 2022). The United Nations' so-called "2030 Agenda" lays forth 18 objectives and 180 goals for achieving this aim through sustainable development, in which cutting-edge technological advancements play a pivotal role. This Agenda represents a commitment on the part of the participating countries to work together to ensure the economic, social, and environmental sustainability of the global community (Alexander, 2017; Cornelli *et al.*, 2022).

However, the Council of Asian developing countries had already developed a study outlining the difficulties and possibilities that the Asian developing countries would face in that year, stressing the importance for revamping the current social and economic model, far before the approval of the "2030 Agenda" by the ADCs (Ambastha *et al.*, 2022). To this end, the Asian developing countries has spent the better part of the last two decades regulating and encouraging a wide range of programs aimed at easing the transition to new technologies within society while also ensuring the most efficient and environmentally friendly use of available resources. To further position Asian developing countries' future in "an economy based on knowledge and innovation," the Asian developing countries has adopted the strategy "2020 Asian developing countries" within the bounds of its delegated powers, in which it offers a project of intelligent growth (Arner, 2016; Douglas W. Arner, 2018).

That's why the year 2020 has been settled upon as the halfway point for domestic and global compliance with the proposed goals. The developing nations of Asia have identified three methods for achieving such "smart growth": (1) raising the budget for research and development; (2) promoting technological education and training of the populace in order to prepare them for the labor market; and (3) improving the technical foundations of the digital society, particularly with regard to the potential of the Internet and ICT (Arner, Barberis and Buckley, 2017). As a further step toward this ultimate objective, a Digital Agenda for Asian developing countries were developed to break down the larger aims of a digitally evolving society into more manageable chunks. Despite this, the Digital Agenda for Pakistan in 2013 provided the real push toward building a digital society by laying the groundwork for the model to be followed in terms of information and communication technologies (ICT), mirroring the Asian developing countries plan (Ambastha et al., 2022; Campbell-Verduyn and Lenglet, 2022).

Regardless, with 2020 behind us and the intended goals not having been met, especially in terms of education and formation, competence acquisition, and the digital impetus in the economy, the Asian developing countries Commission has established some new aims (Godwin *et al.*, 2020). On this occasion, efforts have been concentrated for a period of five years on the following goals: First, putting technology to work for people instead of the other way around; Second, ensuring that businesses of all sizes have equal access to the resources necessary to take advantage of the digital world's services and products; Third, constructing a digital infrastructure that is usable by everyone (Kurum, 2023).

In light of this, and in line with the planned Asian developing countries objectives, a new Digital Plan for 2025 has been authorized in Pakistan, demonstrating a focus on the economic, monetary, and financial sector reforms that are underway there. We must first focus on digitizing the economy, which requires businesses, especially SMEs, to adopt and integrate cutting-edge technologies into their operations in order to increase their productivity, competitiveness, and overall profitability (Arner, 2014; Zeranski and Sancak, 2020). Because of this, it is important to create a "SMEs digitalization impulse plan" by either modernizing public funding to promote entreprenerds in developing countries or creating a law on start-ups that enhances Asia environment. Second, it is suggested that

we should launch our digital transformation by focusing on our economy's most productive industries first. To this end, it is crucial to support the digital agro-food industry's dedication to the Fourth Industrial Revolution. Finally, some have proposed revamping the Pakistani economic structure to better accommodate the data economy by investing more in AI and establishing a legal and ethical framework in accordance with the beliefs held by the majority of Spaniards (Arner, Barberis and Buckley, 2018; Piri, 2018).

Fintech: what it is, how it works, and what kinds of businesses use it

The term "fintech" refers to "financial activities that resort to new technologies in order to improve the efficiency in financial services." Electronic money is where this new market has its roots, and advances in big data, social media, cloud computing, blockchain, the API, and smartphones have all helped it along. Firms advocating for these changes in the financial sector tend to grow exclusively through internet means. Without having to set up a traditional marketplace, they can reach a large number of potential customers this way (Eniola and Entebang, 2015; Hung *et al.*, 2019).

Numerous agents make up these technological systems. The emergence of new, ground-breaking businesses in established industries like asset management and financial services (including lending and payment processing) is one example. The goal of a startup is to fill a void in the market by providing a (digital) service that previously did not exist. On the flip side, we have the tech's creators, who are accountable for the finished product of whatever application or piece of software it is that fulfills this requirement (Bigliardi, 2013; Zhao, Tsai and Wang, 2019; Chen and Yoon, 2022). Different analytical and predictive algorithms that are not artificial intelligences but share a common framework serve as the backbone of these technologies. As a result, the fundamental workings of these programs revolve around data, notably the mega data made available by big data technologies. Not only is the indexing of the Web, including data from social media and navigation system cookies, used often, but scoring algorithms based on big data are also widely used (Joia and dos Santos, 2019). Collecting data is just the first step; the information is then utilized to construct analytical profiles, which are then safely stored in cloud infrastructures (Deb and Agrawal, 2017). In light of the fact that these technologies rely heavily on users' personal information for their functionality, it follows that data protection laws must be adhered to. In light of the constitutional recognition of the right to privacy in Pakistan (Article 18.4 of the Pakistani Constitution), these rules play a significant role in Pakistani law. Additionally, the Council of Asian developing countries Convention No. 108 and its supplementary protocol have safeguarded personal information. Both Article 8 of the Asian developing countries Charter of Fundamental Rights and Article 16 of the Treaty on the Functioning of the Asian developing countries protect this right within the Asian developing countries. To this end, we will analyze the legal issues surrounding data protection by employing a methodology for analysis and a collection of relevant literature. Keep in mind that Fintech won't be able to help our economy unless we find ways to secure people's private information and create algorithms that don't violate their basic rights (Hamdan Allam *et al.*, 2021).

These technologies are aimed primarily at millennials, who are known for their technological savvy, but they are also being adopted by older organizations like banks because new businesses in this space have been found to have a significant advantage in terms of innovation and market share (Godwin *et al.*, 2020). By embracing these innovations, both consumers and financial institutions help pave the way for a more welcoming and diverse workplace, which, when combined with the right tools and trained professionals, has the potential to fundamentally alter the way we think about money. The government, however, must also play a role in encouraging the development and consolidation of these technologies by enacting appropriate RegTech and legal laws (Arner, 2014).

Consequently, the features that define this modern corporate approach are varied. For starters, Fintech is

defined by its online-only distribution of financial services; its official websites are not located anywhere on Earth. Second, this technology is distinguished by its adaptable framework and sturdy approach, making it suitable for changing market conditions. Third, Fintech's main priority is satisfying the preferences of its customers, who are typically tech-savvy (prosumers), but they also provide standout offerings. Last but not least, Fintech is a technology that promotes widespread access to financial services and increases the clarity of financial transactions, both of which work to lessen the financial burden of using digital services (Arner, Barberis and Buckley, 2018; Piri, 2018; Muganyi *et al.*, 2022).

Typically, fintech is categorized in accordance with traditional types of businesses. Payment systems, wealth management, crowdfunding/crowdlending, lending, capital market services, and insurance are the six most prominent business models that emerge from this analysis (see Figure 2).

Figure 2: The Varieties of Fintech Businesses.

Source: Authors' work

While some of these categories exhibit novel features within the legal system, it is important to highlight some overarching considerations with regard to these categories nonetheless. First, ADP seem to be better alternatives to conventional banks, as they do not require a banking license, do not require a physical network, and do all of their business online or via mobile apps. But challenger banks, which tend to concentrate in cutting-edge technological goods, provide a wide variety of services outside traditional banking. These banks have developed a methodical approach to providing their clients with specialized services, often related to the latest technological developments. They have low prices and are making efforts to evolve with the Information Age. The fundamental issue for these institutions is the general public's mistrust (Gurung and Perlman, 2018; Minh, 2022).

Second, a new take on how money can be transferred between parties is introduced. As a result, the option to make transfers online or via mobile phone apps is gaining popularity as a result of the convenience it provides to customers. Another option is the use of a cryptocurrency like bitcoin, which allows for the transfer of digital currency from one piece of software to another without the need for a financial institution to be involved. Sharing links to services like TransferWise and Axis Bank on social media is increasing their popularity. Then there are

online terminal-to-terminal transfers possible with apps like Apple Pay and Google Wallet (Cornelli *et al.*, 2022). Third, this may be done without the need for middlemen when it comes to digital lending or bank loans. With a telematic bank, the user submits the same information as with a traditional bank, but the actions involved are automated. These apps have an edge over traditional methods of assessing creditworthiness since they may be cross-referenced with other public or private databases to verify an individual's or business's ability to repay debt using sophisticated mathematical algorithms. Borrowers are protected from interest rate risk thanks to the digital lending platforms that broker transactions between them and lenders for a fee (Cornelli *et al.*, 2022).

Lastly, we should think about crowdsourcing and crowd investing. Crowdfunding is the practice of raising money for a certain purpose by a large number of individuals all at once through the use of the Internet. Simply said, crowdfunding facilitates the development of new ideas by linking those at the forefront with those willing to invest or provide financial support. What sets this type of participation apart from crowd investing is the possible benefits that may be gained by those who take part (Alexander, 2017).

Finally, we can point to wealth management, which is the integration of financial services, portfolio management, and financial planning. Previously handled by trained experts, this procedure is now mostly automated by computer programs. The rob advisor is a tool used by these innovations; it is based on the conventional financial advisor but makes decisions mechanically, without the involvement of a human (Arner, 2016).

Getting closer to the SDGs with public law and financial technology

As was mentioned before, the financial industry has been revolutionized thanks to the advancements made possible by Fintech. More than 400 micro-specialized Fintechs operate in Pakistan employing an inter-company business model, meaning they market and sell their wares to the financial industry, which then markets and sells them to consumers as innovative new goods (Rizwan and Mustafa, 2022). For a more open and transparent society to be built, and for Agenda 2030's sustainable development goals to be met (see Figure 3), however, these technologies must be governed by public legislation .

Goal 1 of the SDGs is to end poverty everywhere, and fintech helps with this since it expands people's access to financial services, which in turn increases the likelihood of economic growth. The same holds true for the elimination of hunger (Goal 2 of the SDGs) that might be achieved through the widespread adoption of highly technical agriculture by means of a few specific apps that allow for the management of crops (Anshari *et al.*, 2019). However, there is a potential use of Fintech inside public law that is not being fully explored: the use of Fintech to construct an Open Government. Goal 16 of the SDGs is to promote peace, justice, and strong institutions by, among other things, "building effective and transparent institutions at all levels that are accountable," "ensuring inclusive, participatory, and representative decision-making at all levels that responds to needs," and "ensuring public access to information and protecting fundamental freedoms, in accordance with national laws and protecting international agreements."

Figure 3: A summary of this paper's findings regarding the Sustainable Development Goals.
Source: Authors' work

In the legal framework, this kind of governance is not novel, especially in an international setting. The goal is to make institutions more accessible to citizens (in a figurative sense) so that citizens don't lose touch with them, while still preserving the faith and confidence citizens have in them. That's why it's important to treat openness, citizenship, and cooperation as fundamental tenets of society as a whole. To indicate this level of sophistication, Open Government must incorporate principles that are fundamental to the operation of institutions, beyond the simple adoption of new technologies (Al Hammadi and Nobanee, 2019).

The term "Open Government" refers to a similar concept, wherein citizens are given greater access to their government by ensuring that three key elements are in place: (1) the actions of the executive power are made public, (2) citizens work together on public activities, and (3) citizens have input into the development of public policy and services. The advantages of this form of government are self-evident: it promotes a higher level of interaction between the executive branch and the general populace, which in turn fosters a measure of popular control over the administration of a nation's resources and ensures that the people's voices are heard as decision-makers work to resolve any problems that may arise (Abay, Blalock and Berhane, 2017).

Therefore, the transparent design of institutions has been prioritized in Pakistan's efforts to build an Open Government, with an emphasis on promoting transparency websites and providing electronic access to government information. Fintech, on the other hand, has the potential to become yet another instrument that gives citizens more say in how their tax dollars are spent and how their government officials go about doing their jobs (Najaf, Mostafiz and Najaf, 2021). Also, these innovations are highly effective instruments for avoiding tax evasion and fraud because of the benefits they provide for regulating financial assets and economic movements. Governments around the world have mostly ignored fintech despite the industry's potential for profound change (Jamil and Seman, 2019). In Asian developing countries and Pakistan in particular, the Fintech legal framework is inadequate. In order to promote Fintech's consolidation inside the legal system, it is important to examine the legal framework under which it operates and identify the challenges that legislators will need to overcome (Najaf *et al.*, 2023).

Legal framework of Fintech: analyzing development challenges

RegTech of Fintech

Now that Fintech's operational framework has been laid out, it's time to examine the law that underpins it. Sustainable growth is aided greatly by the rule of law. Neither the Asian developing countries like Pakistan has enacted any laws that would specifically encourage the consolidation of these financial applications. However, it is important to note that a legislative draft is now being drafted in an effort to facilitate the digital transformation of the financial system. The financial authorities will be better equipped to perform their duties in the digital age, and more fair growth will be possible thanks to the law's efforts to streamline technical processes (Arner, Barberis and Buckley, 2018; Muganyi *et al.*, 2022).

To achieve this goal, regulators place special emphasis on vetting new financial innovations to guarantee they are safe and useful to society without posing any threats to consumers, the market, or the ability to launder money or fund terrorist activities. However, the proposed improvements in this bill do not aim to drastically alter the Pakistani financial sector and instead describe a legal framework. Therefore, this draft establishes a suitable legal framework for a managed project of technologically-based tests of financial innovation in a way that prevents the authorities from losing management control over what is happening. However, the law mandates that consumers who suffer osses as a result of this trial project will be held harmless from any financial liability (Hamdan Allam *et al.*, 2021; Utami and Septivani, 2022).

The legislation that is applicable would therefore be that which corresponds to the primary functions of these technologies until this regulation is approved, solidified, and its field of application is broadened outside of this

constrained project. In other words, it would be necessary to determine if we are dealing with payment services, bank loans, or investments in order to examine the legal regulation in accordance with the particular requirements to be applied in the relevant sector. However, as mentioned in the paragraphs before, the core components of such technologies are either public or private information about specific users. Compared to the traditional items commercialized in the twentieth century, data have become highly valued assets, maybe constituting the most important commodity in the contemporary market (Ambastha *et al.*, 2022). As a result, we must take into account the legal framework's rules, particularly the Organic Law's regulations on personal data protection and digital right assurance; Asian nations in development Regulations pertaining to the protection of natural persons with regard to the handling of personal data and data-free circulation; and Asian developing countries Regulation, relating to the protection of natural persons with respect to the processing of personal data and the free movement of Guidelines and the applicable legal framework must be incorporated into both public and private rules (Godwin *et al.*, 2020; Campbell-Verduyn and Lenglet, 2022).

Minimizing data collection while maintaining algorithmic transparency

Algorithms used by fintechs are developed from predetermined principles or patterns with the end goal of reaching rational conclusions that can then be used to accomplish predetermined monetary goals. Due to the fact that these algorithms are created by humans, whose ideas may run counter to some legal framework, allowing for the acceptance of choices that are detrimental to citizens' rights, the Fintech system faces significant legal challenges in its functioning (Arner, 2014; Kurum, 2023). In order to safeguard the rights of citizens and lend credibility to the judgments that are made, the notion of algorithmic transparency has assumed a central role. The Asian developing countries Parliament has warned that some rights, such as the right to an environment free of discrimination, the right to equal protection under the law, the right to personal data privacy, and the right to a fair trial, could be breached (Piri, 2018). A FinTech app that discriminates on the basis of race, ethnicity, or nationality without providing any evidence for this bias is one example.

However, the principle of algorithmic transparency is a doctrinal contribution that has yet to be incorporated into the Pakistani legal framework, and there is no cohesive jurisprudence in favor of doing so. However, the opinions of certain legal organizations on this topic have been presented. The District Court of the Islamabad (Pakistan) delivered a ruling on the topic, making it the Asian developing countries Union's authoritative body on the subject of regulating algorithmic transparency and determining its requisite requirements (Hamdan Allam *et al.*, 2021). This statement stresses the significance of providing evidence that the algorithm's underlying system does not rely on stigmatizing or discriminatory criteria to justify its application. Examples of how the algorithm violates the rights guaranteed by numerous international and communitarian texts include how it disproportionately impacts persons of lower socioeconomic position or areas with large immigrant populations. The Resolution of admitting Reclamations brought by the Commission for the Guarantee of the Right to the Access to Public Information (in Lahore, Pakistan) might also be analyzed. Its revolutionary nature stems from the fact that it is the first law to recognize the public's entitlement to see the inner workings of the algorithm that ends a contest between rival parties (Hamdan Allam *et al.*, 2021).

Since big data is where these technologies originate, they rely on a wide variety of data, notably Web-indexed information. However, by accessing the device's cookies, additional information may be gathered, such as social media activity, publications, mobile phone manufacturer and model, and recent commercial activity. This practice violates Asian developing countries data protection laws (Ambastha *et al.*, 2022; Campbell-Verduyn and Lenglet, 2022). Therefore, as a result of Asian developing countries regulation, an obligation to minimize data use when adopting a solution exists, which runs counter to the underlying systems of these technologies. Big data is used as

a source of information in these technologies, and there is no preference given to any particular type of data (Cornelli *et al.*, 2022). These technologies are predicated on the idea that more detailed information about a person leads to more accurate and appropriate decisions being made by the underlying algorithms. It's also important to remember that the information collected or requested might not serve a direct purpose, but rather, it might be done so as to gain more criteria that could be used to build a more general profile of the user. When combined with other factors, such as a person's country of origin or current place of residence, the make and model of their mobile phone may serve as a proxy for their financial well-being or signal that they are living above their means (Arner, 2016; Douglas W. Arner, 2018).

The issues surrounding the automated processing of personally identifiable information

Even after a system is in place that is open, fair, and uses only relevant data, legal challenges may still arise as a result of the technologies' origins. It is imperative that first and foremost, app developers adhere to the general rights consolidated in data protection rules. This means that the app's settings need to be configured properly ahead of time in order to make use of these privileges throughout the duration of data processing. Therefore, digital firms must plan ahead from the start for a system that protects the rights provided by legal norms, even if doing so poses a danger to the underlying systems on which these programs run (Barrell and Davis, 2011; Arner, Barberis and Buckley, 2017).

Second, Fintechs should be especially careful about where they get the analyzed data that informs their decisions. Using information gleaned from social media or cookies is where the debate heats up the most (Hasan, Yajuan and Mahmud, 2020). As a result, the creators of these platforms make use of any and all publicly accessible internet data, under the assumption that they do not require the owner's permission to do so. Although courts have ruled that such conduct is not illegal, it does violate the privacy rights that are guaranteed by law for individuals' sensitive information (Liu *et al.*, 2022). This shows that the Constitutional Court recognizes that a user's mere status as a social media user, with accompanying general treatment consent, precludes any further use of the user's data. As a result, the consent that users give without their full understanding cannot be used indefinitely or for an unknown purpose, and more specifically, as indicated by current doctrine, when data are gathered without receiving any service in exchange — that is to say, when the economic value of their data has no counterparty for users. This is why social media platforms need to build user consent into their systems so that data collected from users may be put to good use. Data privacy is a basic human right that would be compromised otherwise (Chen *et al.*, 2017; Lv, Shao and Lee, 2021).

The same holds true for any data gleaned via browser cookies or the device in question. Naturally, permission from a data owner is required before doing anything with data obtained online. However, the terms of this online approval must be identical to those used in the real world. To treat data for a particular purpose and have it supported by an affirmative declaration, the consent must be free, precise, informed, and unequivocal (Issaka Jajah, Anarfo and Aveh, 2022). Therefore, the supplier in charge of collecting these data must offer clear and complete information in a manner that allows the user to comprehend the implications of their consent in the event that a service is provided. Therefore, the offered information must include the duration during which cookies would be active on the device, the reason for acquiring this information, and the extent to which data can be transferred to other parties while still being considered private (Zhao, Tsai and Wang, 2019).

On the other side, it is crucial that the data used have not been prejudiced by utilizing particular criteria in order to obtain correct procedural resolutions. Thus, it is crucial to use authentic microdata rather than data collected from platforms where it has already been modified. However, there are further issues beyond information mining itself, as data storage raises some ethical concerns as well (Chen and Yoon, 2022). Due to the massive amounts of data available today, traditional computer architecture programs are no longer viable, and businesses are instead

deciding to pool their storage space or perform distributed computation across multiple webservers. The problem here is that different laws and competent jurisdictions may apply depending on where these webservers are physically located. This is not a major issue in the Asian developing countries because all Member States follow the same rules when it comes to protecting sensitive and non-sensitive information. The difficulty occurs when the data originate from nations outside the Asian developing countries with less stringent regulatory frameworks.

Finally, it is true that the approaches behind these technologies contribute to the development of professional profiles via aggregation systems, even though they do not always employ solely personal data. Current jurisprudence holds that the General Data Protection Regulation's legal regime applies to the development of these profiles; as such, all rights are potentially applicable (Joia and dos Santos, 2019). However, it is important to note that citizens can still object to the decisions made by the program in the absence of express consent, even if the data in question are not personally identifiable. Because of this, the Asian developing countries Convention on Human Rights requires that all data held in a communications network be safeguarded because it is an intimate part of the lives of its users. In light of the potential for hidden IDs or similar devices to gain unauthorized access to the aforementioned computer equipment, it is imperative that all data stored in said equipment be protected, regardless of whether or not it contains personally identifiable information.

Conclusion

Though fintech has emerged as one of the finest allies in the fight for sustainable development, it is still important to evaluate how much it might be able to do to help the SDGs be accomplished. The Asian developing countries-wide protective regulatory framework for data protection, however, is now restricting the growth of the fintech industry. This isn't just a Fintech problem; rather, it's a problem that affects all technologies that use data as a fundamental building block and big data to enhance and deliver higher-quality services. In this scenario, artificial intelligence and the Internet of Things. The General Data Protection Regulation must, however, be viewed in the context of a Asian developing countries civilization that aspires to create a digital society based on the vast optimization and use of data.

Due to this, we may mention the development of a study about the requirement for adopting legal measures related to issues influencing the relationships between the various economic actors inside of a flexible economy of data management as one of the measures agreed upon by the Asian developing countries Data Strategy. This plan also chooses an ambitious project involving Asian developing countries data spaces that entails data interchange architecture, governance mechanisms, and an Asian developing countries federation of cloud infrastructure, all from a proactive and dependable standpoint, along with its connected services. According to estimates, this would cost between four and five billion Asian developing countries in total investments. Furthermore, the creation of common data spaces in Asian developing countries crop is anticipated for a number of key public sector important economic sectors. This must open the door to the development of large data repositories in particular locations that, when combined with the required equipment and technical framework, would permit the use and exchange of all forms of data. It would also be important in this regard to create some suitable governance mechanisms in charge of the handling and management of these data. Based on this experience, the Asian developing countries Cloud of Open Science would be built, whose shared spaces would be the following: business, the Asian developing countries Green Deal, mobility, health, financial issues, energy, the agricultural sector, public administrations, and qualifications. These industries have high expectations for fintech because they have access to a legal system that allows them to explore all of their potential.

Declaration

Acknowledgment: The authors would like to thank the respondents who participated in this study. Furthermore, the authors would like to express their sincere gratitude to the editor and anonymous reviewers for their insightful comments and suggestions.

Funding: There is no funding sources from any agency or institute.

Conflict of interest: There is no conflict of interest between authors.

Authors contribution: The author read and approved the final manuscript. Shahid Hussain contributed to data curation and writing—original draft preparation, contributed to conceptualization, methodology, software, and supervision. Saad ur Rehman contributed to writing—reviewing, editing, and supervision.

Data availability: Data is available on request.

References

Abay, K.A., Blalock, G. and Berhane, G. (2017) 'Locus of control and technology adoption in developing country agriculture: Evidence from Ethiopia', *Journal of Economic Behavior and Organization*, 143, pp. 98–115. Available at: https://doi.org/10.1016/j.jebo.2017.09.012.

Alexander, K. (2017) 'Financial Inclusion , Fintech , and RegTech Session 3 : Services policies and regulation for', (July), pp. 18–20.

Ambastha, A. *et al.* (2022) *Implication of Cyber Security in a Digital Economy: Learning from Corporate Sector with Special Reference to BFSI, Lecture Notes in Networks and Systems*. Available at: https://doi.org/10.1007/978-3-030-93464-4_53.

Anshari, M. *et al.* (2019) 'Digital marketplace and FinTech to support agriculture sustainability', in *Energy Procedia*. Elsevier Ltd, pp. 234–238. Available at: https://doi.org/10.1016/j.egypro.2018.11.134.

Arner, D. (2016) 'FinTech: Evolution and Regulation', *June 2016*, pp. 1–18. Available at: https://law.unimelb.edu.au/__data/assets/pdf_file/0011/1978256/D-Arner-FinTech-Evolution-Melbourne-June-2016.pdf.

Arner, D.W. (2014) 'FinTech and RegTech: Opportunities and Challenges', *Asian Institute of International Financial Law University …* [Preprint]. Available at: https://aiifl.law.hku.hk/content/uploads/ppt/JFR-Arner_Douglas_ppt.pdf.

Arner, D.W., Barberis, J.N. and Buckley, R.P. (2017) 'The Emergence of Regtech 2.0: From Know Your Customer to Know Your Data', *SSRN Electronic Journal*, (March 2017), pp. 0–19. Available at: https://doi.org/10.2139/ssrn.3044280.

Arner, D.W., Barberis, J.N. and Buckley, R.P. (2018) 'FinTech and RegTech in a Nutshell, and the Future in a Sandbox', *SSRN Electronic Journal* [Preprint]. Available at: https://doi.org/10.2139/ssrn.3088303.

Barrell, R. and Davis, E.P. (2011) 'Financial regulation', *National Institute Economic Review*, 216(1). Available at: https://doi.org/10.1177/0027950111411368.

Bigliardi, B. (2013) 'The effect of innovation on financial performance: A research study involving SMEs', *Innovation: Management, Policy and Practice*, 15(2), pp. 245–255. Available at: https://doi.org/10.5172/impp.2013.15.2.245.

Campbell-Verduyn, M. and Lenglet, M. (2022) 'Imaginary failure: RegTech in finance', *New Political Economy* [Preprint]. Available at: https://doi.org/10.1080/13563467.2022.2140795.

Chen, H. and Yoon, S.S. (2022) 'Does technology innovation in finance alleviate financing constraints and reduce debt-financing costs? Evidence from China', *Asia Pacific Business Review*, 28(4), pp. 467–492. Available at: https://doi.org/10.1080/13602381.2021.1874665.

Chen, Z. *et al.* (2017) 'The transition from traditional banking to mobile internet finance: an organizational innovation perspective - a comparative study of Citibank and ICBC', *Financial Innovation*, 3(1). Available at: https://doi.org/10.1186/s40854-017-0062-0.

Cornelli, G. *et al.* (2022) 'Big Data in Asian Central Banks', *Asian Economic Policy Review*, 17(2), pp. 255–269. Available at: https://doi.org/10.1111/aepr.12376.

Deb, M. and Agrawal, A. (2017) 'Factors impacting the adoption of m-banking: understanding brand India's potential for financial inclusion', *Journal of Asia Business Studies*, 11(1), pp. 22–40. Available at: https://doi.org/10.1108/JABS-11-2015-0191.

Douglas W. Arner, et. a. (2018) 'Electronic copy available at : Electronic copy available at ':, *Grou*, 23529(2), pp. 1–45.

Eniola, A.A. and Entebang, H. (2015) 'SME Firm Performance-Financial Innovation and Challenges', *Procedia - Social and Behavioral Sciences*, 195, pp. 334–342. Available at: https://doi.org/10.1016/j.sbspro.2015.06.361.

Godwin, A. *et al.* (2020) 'RegTech Innovation and Cooperation-Australia and China Compared Why Compare Australia and China?', *Australian Journal of Asian Law*, 21(1), pp. 39–55. Available at: https://ssrn.com/abstract=3748936.

Gurung, N. and Perlman, L. (2018) 'Use of Regtech by Central Banks and Its Impact on Financial Inclusion', *SSRN Electronic Journal*, pp. 1–70. Available at: https://doi.org/10.2139/ssrn.3285985.

Hamdan Allam *et al.* (2021) *Studies in Computational Intelligence 935 The Fourth Industrial Revolution: Implementation of Artificial Intelligence for Growing Business Success*. Available at: http://www.springer.com/series/7092.

Al Hammadi, T. and Nobanee, H. (2019) 'FinTech and Sustainability: A Mini-Review', *SSRN Electronic Journal* [Preprint]. Available at: https://doi.org/10.2139/ssrn.3500873.

Hasan, M.M., Yajuan, L. and Mahmud, A. (2020) 'Regional Development of China's Inclusive Finance Through Financial Technology', *SAGE Open*, 10(1). Available at: https://doi.org/10.1177/2158244019901252.

Hung, D.N. *et al.* (2019) 'An Empirical Analysis of Perceived Transaction Convenience, Performance Expectancy, Effort Expectancy and Behavior Intention to Mobile Payment of Cambodian Users', *International Journal of Marketing Studies*, 11(4), p. 77. Available at: https://doi.org/10.5539/ijms.v11n4p77.

Issaka Jajah, Y., Anarfo, E.B. and Aveh, F.K. (2022) 'Financial inclusion and bank profitability in Sub-Saharan Africa', *International Journal of Finance and Economics*, 27(1), pp. 32–44. Available at: https://doi.org/10.1002/ijfe.2135.

Jamil, N.N. and Seman, J.A. (2019) *The Impact of Fintech On The Sustainability Of Islamic Accounting And Finance Education In Malaysia, Journal of Islamic, Social, Economics and Development (JISED)*. Available at: www.jised.com.

Joia, L.A. and dos Santos, R.P. (2019) 'ICT-equipped bank boat and the financial inclusion of the riverine population of Marajó Island in the Brazilian Amazon', *Information Systems Journal*, 29(4), pp. 842–887. Available at: https://doi.org/10.1111/isj.12200.

Kurum, E. (2023) 'RegTech solutions and AML compliance: what future for financial crime?', *Journal of Financial Crime*, 30(3), pp. 776–794. Available at: https://doi.org/10.1108/JFC-04-2020-0051.

Liu, H. *et al.* (2022) 'Impact of Green financing, FinTech, and financial inclusion on energy efficiency', *Environmental Science and Pollution Research*, 29(13), pp. 18955–18966. Available at: https://doi.org/10.1007/s11356-021-16949-x.

Lv, C., Shao, C. and Lee, C.C. (2021) 'Green technology innovation and financial development: Do environmental regulation and innovation output matter?', *Energy Economics*, 98, p. 105237. Available at: https://doi.org/10.1016/j.eneco.2021.105237.

Minh, N.H. (2022) 'The Impact of ICT on Financial Development: Evidence from Southeast Asian Countries', *Vnu Journal of Economics and Business*, 2(5), p. 115. Available at: https://doi.org/10.57110/jeb.v2i5.4838.

Muganyi, T. *et al.* (2022) 'Fintech, regtech, and financial development: evidence from China', *Financial Innovation*, 8(1). Available at: https://doi.org/10.1186/s40854-021-00313-6.

Najaf, K. *et al.* (2023) 'Does sustainability matter for Fintech firms? Evidence from United States firms', *Competitiveness Review*, 33(1), pp. 161–180. Available at: https://doi.org/10.1108/CR-10-2021-0132.

Najaf, K., Mostafiz, M.I. and Najaf, R. (2021) 'Fintech firms and banks sustainability: Why cybersecurity risk matters?', *International Journal of Financial Engineering*, 08(02), p. 2150019. Available at: https://doi.org/10.1142/s2424786321500195.

Piri, M.M. (2018) 'The Changing Landscapes of FinTech and RegTech: Why the United States Should Create a Federal Regulatory Sandbox', *Bus. & Fin. L. Rev.*, 2(2), p. 233.

Rahi, S. *et al.* (2019) 'Integration of UTAUT model in internet banking adoption context: The mediating role of performance expectancy and effort expectancy', *Journal of Research in Interactive Marketing*, 13(3), pp. 411–435. Available at: https://doi.org/10.1108/JRIM-02-2018-0032.

Rizwan, A. and Mustafa, F. (2022) 'Fintech Attaining Sustainable Development: An Investor Perspective of Crowdfunding Platforms in a Developing Country', *Sustainability (Switzerland)*, 14(12). Available at: https://doi.org/10.3390/su14127114.

von Solms, J. (2021) 'Integrating Regulatory Technology (RegTech) into the digital transformation of a bank Treasury', *Journal of Banking Regulation*, 22(2), pp. 152–168. Available at: https://doi.org/10.1057/s41261-020-00134-0.

Suzuki, M. (2015) 'Identifying roles of international institutions in clean energy technology innovation and diffusion in the developing countries: Matching barriers with roles of the institutions', *Journal of Cleaner Production*, 98(2014), pp. 229–240. Available at: https://doi.org/10.1016/j.jclepro.2014.08.070.

Utami, A.M. and Septivani, M.D. (2022) 'Solutions to money laundering prevention through Regulatory Technology (RegTech): Evidence from Islamic and conventional banks', *Jurnal Ekonomi & Keuangan Islam*, 8(1), pp. 17–31. Available at: https://doi.org/10.20885/jeki.vol8.iss1.art2.

Zeranski, S. and Sancak, I.E. (2020) 'Implications of Germany's Draft Electronic Securities Regulation for RegTech and SupTech', *SSRN Electronic Journal* [Preprint], (October). Available at: https://doi.org/10.2139/ssrn.3692401.

Zhao, Q., Tsai, P.H. and Wang, J.L. (2019) 'Improving financial service innovation strategies for enhancing China's banking industry competitive advantage during the fintech revolution: A hybrid MCDM model', *Sustainability (Switzerland)*, 11(5), pp. 1–29. Available at: https://doi.org/10.3390/su11051419.